Jyväskylän yliopiston julkaisuarkisto
Jyväskylä University Digital Archive

UNIVERSITY OF JYVÄSKYLÄ

This is an electronic reprint of the original article.
This reprint *may differ* from the original in pagination and typographic detail.

Author(s): Sointu, Erkko T.; Savolainen, Hannu; Lappalainen, Kristiina; Lambert, Matthew C.

Title: Longitudinal associations of student–teacher relationships and behavioural and emotional strengths on academic achievement

Year: 2017

Version:

Please cite the original version:

Sointu, E. T., Savolainen, H., Lappalainen, K., & Lambert, M. C. (2017). Longitudinal associations of student–teacher relationships and behavioural and emotional strengths on academic achievement. Educational Psychology, 37(4), 457-467. https://doi.org/10.1080/01443410.2016.1165796

All material supplied via JYX is protected by copyright and other intellectual property rights, and duplication or sale of all or part of any of the repository collections is not permitted, except that material may be duplicated by you for your research use or educational purposes in electronic or print form. You must obtain permission for any other use. Electronic or print copies may not be offered, whether for sale or otherwise to anyone who is not an authorised user.

Longitudinal associations of student–teacher relationships and behavioral and emotional strengths on academic achievement

Erkko T. Sointu [1]

Hannu Savolainen [2]

Kristiina Lappalainen [1]

Matthew C. Lambert [4]

[1] University of Eastern Finland

[2] University of Jyväskylä

[3] University of Nebraska-Lincoln

Accepted manuscript to Educational Psychology, DOI: 10.1080/01443410.2016.1165796.

[1]Erkko T. Sointu (Post-doc Researcher) Philosophical Faculty, School of Educational Science and Psychology, University of Eastern Finland; [2]Hannu Savolainen (Professor), Department of Teacher Education, Special Education, University of Jyväskylä; [3]Kristiina Lappalainen (Senior Researcher), School of Educational Science and Psychology, University of Eastern Finland; [4]Matthew C. Lambert (Assistant Professor), Department of Special Education and Communication Disorders, University of Nebraska-Lincoln.

Correspondence concerning this article should be addressed to Erkko T. Sointu, Philosophical Faculty, School of Educational Science and Psychology, University of Eastern Finland, PO Box 111, 80101 Joensuu, Finland. E-mail: erkko.sointu@uef.fi.

Abstract

Positive student–teacher relationships are related to students' academic achievement and behavioral and emotional adjustment. How a student's behavioral and emotional strengths are associated with these relationships and how the relationships influence students' academic performance remains unknown. We examined this framework using a cross-lagged panel model with a group of Finnish students and their parents from Grade 5 to Grade 7. The results revealed that the parents rated behavioral and emotional strengths are stable over a one-year (r=.78) and two-year (r=.71) period and that students' perceptions of student–teacher relationships demonstrated greater change over time (r's=.54, .35). Behavioral and emotional strengths demonstrated a positive relationship with student–teacher relationships as well as academic achievement (β = .39, p < .01). Strengths were also indirectly associated with academic achievement via student–teacher relationships. Study limitations, implications and future research are discussed.

Keywords: Behavioral and emotional strengths, student–teacher relationships, academic achievement, longitudinal modeling, cross-lagged model

Introduction

Recently, many studies suggest that supportive student–teacher relationships promote students' positive learning outcomes and behavioral and emotional adjustment (e.g., Roorda, Koomen, Spilt, & Oort, 2011). Student–teacher relationships can also contribute significantly to students' overall development throughout their schooling (Davis, 2003; Resnick et al., 1997). Although the importance of student–teacher relationships is well documented, it is not known how a student's behavioral and emotional strengths are associated with these relationships and how the relationships influence the student's academic performance. To address this question, an investigation of the relationships between student–teacher relationships (rated by students) and behavioral and emotional strengths (rated by parents) over time on academic achievement (rated by teachers) was conducted. Different informants (i.e., students, parents and teachers) were used for different domains (i.e., relationships, strengths, and academic achievement respectively) in order to avoid monomethod bias (see, e.g., Kline, 2009). Tsai and Cheney (2012) suggest that using solely one informant (e.g., teacher) may cause biased findings, and therefore, studies of students' social, behavioral and academic outcomes could benefit by using multiple informants or data to provide a more objective view of student outcomes.

Several researchers and studies have shown that strong and supportive student–teacher relationships function as a protective factor toward students' school and behavior and emotion related problems (Baker, 2006; Baker, Grant, & Morlock, 2008; Berry & O'Connor, 2010; Hamre & Pianta, 2001; Liew, 2012; Meehan, Hughes, & Cavell, 2003; Werner & Smith, 2001). From a teacher perspective, within these positive relationships, teachers may put forth additional effort toward positive behavioral

support as well as teach and encourage students' self-regulatory skills (Hamre & Pianta, 2001; O'Connor, Dearing, & Collins, 2011). Thus, positive student–teacher relationships can mitigate negative impacts on academic outcomes for students at-risk of school failure (see also Davis, 2003; Hamre & Pianta, 2006). Positive relationships with warm and supportive adults in schools, such as teachers, are related to adaptive student achievement behaviors (Baker, Grant, & Morlock, 2008; Hamre & Pianta, 2006; Ladd & Burgess, 2001; Liew, 2012; Pakarinen et al., 2014). These student–teacher relationships can increase a student's motivation for learning, perceived academic competence, school engagement, attitudes toward school and academic achievement, and the teachers can support the students in dealing with the demands of schoolwork (Baker, 2006; Beebe-Frankenberger et al., 2005; Davis, 2003; Hamre & Pianta, 2001; Hughes, 2011; Pianta & Stuhlman, 2004; Roorda et al., 2011; Tsai & Cheney, 2012; Zee, Koomen, & Van der Veen, 2013). Not only do positive student–teacher relationships support students' academic achievement, but they are also an important factor in terms of the socio-emotional needs of students (Capern & Hammond, 2014).

According to previous research, positive student–teacher relationships foster students' self-regulatory and socio-emotional skills growth and how students exhibit emotional and behavior problems (Berry & O'Connor, 2010; O'Connor, Dearing, & Collins, 2011). On the other hand, negative student–teacher relationships are associated with students' problematic behavior and low self-esteem (Baker, 2006; Berry & O'Connor, 2010; Capern & Hammond, 2014; Hamre & Pianta, 2006; Liu, Li, Chen, & Qu, 2015; O'Connor, Dearing, & Collins, 2011; Pianta & Stuhlman, 2004). For example, teachers may have fewer interactions and spend less time to promote success with students who demonstrate problematic behavior and instead must spend more

controlling their behavior (Bradley, Doolittle, & Bartolotta, 2008; Hamre & Pianta, 2001; Wehby, Symons, Canale, & Go, 1998). As Capern and Hammond (2014) stated, positive student–teacher relationships are important for all students but especially for students with emotional and behavioral disorders (EBD). First, there is a plethora of evidence regarding EBD students' underperformance with respect to academic achievement (Kauffman & Landrum, 2013; Lane, Carter, Pierson, & Glaeser, 2006; Nelson, Benner, Lane, & Smith, 2004; Reid, Gonzalez, Nordness, Trout, & Epstein, 2004; Trout, Nordness, Pierce, & Epstein, 2003) and socio-emotional skills (Bowers, 2006; Cullinan & Sabornie, 2004; Kauffman & Landrum, 2013; Quinn, Kavale, Mathur, Rutherford, & Forness, 1999). Second, it is well known that in the worst-case scenario, EBD can have many long-term consequences for students' lives, for example, ongoing problems with social life and education and difficulties in employment (Bradley et al., 2008; Bradley, Henderson, & Monfore, 2004; Hotulainen & Lappalainen, 2011; Kauffman & Landrum, 2013; Lappalainen & Hotulainen, 2012). Within this frame, it is important to examine the associations between student–teacher relationships, behavior and emotional adjustment and academic achievement.

The assessment tools for evaluating the behavioral and emotional adjustment of students have been based on measuring deficits and problems. Recently, deficit-orientated assessment approaches to measuring student performance have received criticism, as they may create a biased view without addressing students' skills, competencies, assets or strengths and therefore do not take the whole child into account (e.g., Rashid & Ostermann, 2009; Snyder, Ritschel, Rand, & Berg, 2006). Conversely, the assessment of students' emotional and behavioral strengths has garnered the attention of school professionals and educational researchers (e.g., Kauffman &

Landrum, 2013; Lambert, Savolainen, Sointu, Lappalainen, & Epstein, 2015; Oliver, Cress, Savolainen, & Epstein, 2014). Different from deficit-based assessments, strength-based assessments have been defined "as the measurement of those emotional and behavioral skills, competencies, and characteristics that create a sense of personal accomplishment; contribute to satisfying relationships with family members, peers and adults [e.g. with teachers]; enhance one's ability to deal with adversity and stress; and promote one's personal, social and academic development" (Epstein, 2004, p. 4).

The rationale for the behavioral and emotional strength-based assessment perspective can be reasoned from two perspectives: resiliency and positive youth development (PYD) (see, e.g., Epstein 2004; Hotulainen, Lappalainen, & Sointu 2014). Resiliency itself is generally defined as a process reducing vulnerability to risk experiences, overcoming adversity and stress and obtaining relatively positive outcomes despite risk experiences, and it has two components: (a) successful adaption to life situations for achieving positive outcomes (i.e., protective factors) and (b) the presence of problematic, challenging or even threatening life situations (i.e., risk factors) (Luthar, Crossman, & Small, in press; Rutter, 1987, 2006, 2012; Werner & Smith, 2001). For example, when students have strong protective factors, they are more likely to put effort into school achievement (Sutherland, Conroy, Abrams, & Vo, 2010). Another approach to explain the importance students' strength identification is the PYD framework, which considers the importance of aligning individual strengths and assets around individuals to enable the positive development, learning and growth of youth (Geldhof, Bowers, & Lerner, 2013; Lerner, Bowers, Geldhof, Gestsdóttir, & DeSouza, 2012).

There is some evidence that students' behavioral and emotional strengths are associated with students' overall social skills and competencies, adjustment and

appropriate behavior in school and academic performance (Harniss, Epstein, Ryser, & Pearson, 1999; Harniss & Epstein, 2005; Trout, Ryan, La Vigne, & Epstein, 2003). In these studies, teachers have rated the emotional and behavioral strengths as well as the skills, behavior, academic performance and learning of elementary age students, and significant correlations have been found between these ratings; however, the relationship between youth strengths and actual academic achievement has not been investigated. In addition, according Sutherland et al. (2010), highlighting students' behavioral and emotional strengths increases supportive teacher–student relationships and promotes a positive school environment for them. Furthermore, it has been suggested that the relationship between strengths, specifically prosocial behavior, and academics may be mediated by the quality of teacher–student relationships (Spinard & Eisenberg 2009). Therefore, it is important to investigate not only the associations between relationships and strengths on academic achievement, but also possible indirect effects as well as and stability over time to obtain more solid evidence of the phenomenon.

In summary, previous research suggests that student–teacher relationships are one of the most important factors in the school achievement and outcomes of students with behavior and emotional problems (e.g., Baker et al., 2008; Capern & Hammond, 2014; Murray & Murray, 2004). Recently, the value of strength-based assessments has been increasingly recognized in assessing students' socio-emotional behavior (Kauffman & Landrum, 2013). According to our knowledge, there is no previous research in which student–teacher relationships, behavioral and emotional strengths and academic achievement were examined together. Therefore, the present study aims (a) to investigate the relationships between behavioral and emotional strengths and student–

teacher relationships over time and (b) to test the efficacy of these variables to predict academic achievement. We hypothesized that strengths and student–teacher relationships have a bidirectional positive relationship over time (i.e., students with greater strengths will develop better relationships in future grades and students with better relationships will developed greater strengths in future grades) and that both predictors will have a significant positive relationship with academic achievement (see also Figure 1).

Insert Figure 1 about here

Methods

Participants

The sample was a part of a larger study of school inclusion in Eastern Finland involving 46 schools during 2010–2012. In this longitudinal study, the participating students were in grades 5 to 7 (11–14 years old) in the area's basic education schools. In this study, student status such as special educational designation or high-risk status was not separately identified. The assessments were administered to parents when their children were in fifth (*N*=295), sixth (*N*=363), and seventh (*N*=328) grades. Similarly, the student questionnaires were administered to them when they were in fifth (*N*=588), sixth (*N*=631) and seventh (*N*=595) grade. The students reflected the racial/ethnic composition of the region, which was overwhelmingly Finnish and Caucasian in origin, with less than 5% other ethnicities.

Measures

Three measures were used in the study. Student–teacher relationships were measured with the School Well Being Profile Questionnaire (SWBPQ; Konu, Alanen, Lintonen, & Rimpelä, 2002; Konu & Lintonen, 2006), student behavioral and emotional strengths were assessed by the Behavioral and Emotional Rating Scale-2 (Epstein, 2004) and academic achievement was measured by computing student grade point average.

The SWBPQ is a student-rated measure of overall well-being in four categories: school conditions, social relationships, self-fulfillment and health status (Konu et al., 2002; Konu & Lintonen, 2006). The SWBPQ includes 56 items that ask students to respond on a three-point Likert-type scale (1=*disagree*, 2=*neither agree nor disagree*, 3=*agree*). Researchers have reported adequate internal consistency and validity with this measure (Konu et al., 2002; Konu & Lintonen, 2006). In the present study, we were interested in assessing student perception of student–teacher relationships rather than broader social relationships. Based on exploratory factor analyses, we extracted a five-item factor that measured student–teacher (ST) relationships. The five items were "*our school's teachers are friendly", "the teacher listens to my opinions", "the teacher treats us students fairly and equitably", "students' opinion are taken into account regarding school matters"* and *"it is easy to get along with our teachers"*. The ST relationship subscale had adequate Cronbach's alphas across the three years (5th grade α =.79; 6th α =.85; 7th α =.85).

Parents completed the Finnish-translated Behavioral and Emotional Rating Scale-2 (BERS-2; Epstein, 2004; Sointu, Savolainen, Lambert, Lappalainen, & Epstein, 2014), in which 52 items are rated on a four-point Likert-type scale (0=*not at all like your child*, 1=*not much like your child*, 2=*like your child*, 3=*very much like your child*).

The BERS-2 includes five subscales (interpersonal strengths [IS], family involvement [FI], intrapersonal strengths [IaS], school functioning [SF] and affective strengths [AS]), and these subscales form the Strength Index score (strength). IS measures a child's ability to control his or her emotions or behaviors in social situations, FI measures a child's participation in and relationship with his or her family, IaS measures in a broad sense a child's outlook on his or her competence and accomplishments, SF focuses on the child's competence in school and classroom tasks and AS assesses a child's ability to accept affection from others and express feelings toward others (Esptein, 2004). Items in different subscales include statements such as "*Expresses remorse for behavior that hurts or upsets others*" (IS), "*Interacts positively with parents*" (FI), "*Identifies own feelings*" (IaS), "*Completes school tasks on time*" (SF) and "*Shows concern for the feelings of others*" (AS). Prior research with Finnish samples found the BERS-2 to have adequate internal reliability, construct validity (Lappalainen, Savolainen, Kuorelahti, & Epstein, 2009; Sointu et al., 2014) and convergent validity (Savolainen, Nordness, Sointu, Lappalainen, & Epstein, 2013; Sointu, Savolainen, Lappalainen, & Epstein, 2012). For the present study, only the Strength Index (strength) score was used. The reliability for the strength measure was acceptable (5th grade α =.94; 6th α =.95; 7th α =.95). Both the SWBPQ and BERS-2 were administered between April and May each year; thus, the interval between measurement points was approximately one year.

Seventh-grade grade point average (GPA) was used as the outcome variable. GPA constituted four different academic school subjects (Finnish language and literature, English, Swedish and Mathematics). These data were obtained from official school records from participating school administration offices at the end of the school

year. Students receive grades at the end of the school year for each subject they have studied, and these grades are given by subject-specific teachers (e.g., math or English) usually on the basis of several examinations. The grading of school subject in Finland ranges from 4 (lowest possible score) to 10 (highest possible score), where a score above 5 is considered a *passing* grade, and the modal grade is typically 8.

Procedures

The data were collected on all students with assent and consent between the years 2010 and 2012 as part of the Finnish National Board of Education funded study *Eastern Finland Education Development Project*. In the first year, the project coordinator team contacted participating municipalities and asked whether teachers and school administrator were willing to volunteer for the project. Then, parent/caregiver participation was sought, and parents were asked to discuss the study with their child to secure the child's assent and to return the forms to the researchers. The student data collection was group-administered with paper-pencil questionnaire each year, and students completed the SWBPQ during a one-week period of time within regular school hours. The parent BERS-2 questionnaire was given to students along with a response letter, return envelope to the researchers and detailed instructions for completing the BERS-2.

Data Analysis

SPSS v19 was also used to generate descriptive statistics and reliability estimates for each scale used in this study. Mplus v 7.11 (Muthén & Muthén, 1998–2013) was used to fit a cross-lagged panel model (Campbell & Stanley, 1963; Campbell & Kenny, 1999) to assess the reciprocal relationships between behavioral and emotional strengths and student–teacher relationships over time and the relationship between these

two variables and academic achievement. We also tested the indirect effect of strengths on academic achievement through how strengths influence student–teacher (ST) relationships. The model was built in three phases. The first phase included autoregressive paths between the three measurement points for the Strength Index (strength) and ST relationship scores, and the Grade Point Average (GPA) was regressed on the strength and ST relationship. In addition, the strength and ST relationship variables were allowed to correlate for each measurement point. Second, one-year cross-lagged paths between the strength and ST relationship were added to the model. Third, non-significant cross-lagged paths and correlations were removed from the final model. Only the parameters from the final model are presented in the results section. Fourth, two indirect effects were specified and tested with bootstrapping method (the default bootstrap of Mplus), with maximum likelihood (ML) estimator and 1000 draws. We had to use to ML for bootstrapping due to the fact that MLR does not allow bootstrapping analysis. The first indirect effect was strength on 5th grade to strength on 6th grade to ST relationship on 7th grade on GPA. The second one was strength on 5th grade to strength on 6th grade to ST relationship on 7th grade on GPA.

The model was estimated using full information maximum likelihood with robust standard errors (MLR). We used the Mplus default method to account for missing data, which assumes that data are missing at random (MAR) and includes the missingnesss in the estimation process using a model-based algorithm (Muthén & Muthén, 1998–2013). The goodness-of-fit was assessed using the comparative fit index (CFI; Bentler, 1990), the root mean square of the approximation (RMSEA; Steiger & Lind, 1980) and the standardized root mean square residual (SRMR; Hu & Bentler, 1999). We reported the χ^2 for the model; however, this indicator of fit was not

interpreted because, with large sample sizes, the test is overly conservative and may be misleading (Brown, 2006). Models with CFI values above 0.95 and RMSEA and SRMR values less than 0.05 are generally considered ‘close fitting’ (Brown, 2006; Hu & Bentler, 1999). Fully standardized coefficients were used to interpret model parameters for all the direct and indirect effects.

Results

The correlation matrix along with means (*M*) and standard deviations (*SD*) is presented in Table 1. As the first-order correlations indicate, the Strength Index (strength) score was highly correlated across time, suggesting that strengths are very stable for students at this age level. Similarly, the correlations were moderate to large in magnitude for Student-Teacher (ST) relationship across time, indicating a moderate degree of stability in these relationships from year to year and from teacher to teacher.

Insert Table 1 about here

The stability of the strength and ST relationship indicates that inter-individual change is relatively limited over time but also that there is greater change in the students’ perception of their relationships with their teachers. The level of a child’s strength indicates that parents’ see their children as possessing quite high levels of behavioral and emotional strengths, and the level of ST relationship indicates that student see their relationships with teachers as adequate. In addition, the mean GPA (7.96) indicates a relatively high level of academic achievement and follows the general structure of academic achievement in Finnish schools. The final cross-lagged model (with parameter estimates) is presented graphically in Figure 2. All the model fit

indicators suggest that the data fit the model closely ($\chi^2_{12} = 33.47$, $p < .001$; CFI = 0.97; RMSEA = 0.05, SRMR = 0.04).

Insert Figure 2 about here

Reciprocal Relationships

The one-year lagged paths between strength and ST relationship indicate that strengths predict future student–teacher relationships, but not vice-versa. That is, strengths in 5th grade predict ST relationship in 6th grade ($\beta = .17$, $p < .01$), and strengths in 6th grade predict ST relationship in 7th grade ($\beta = .13$, $p < .01$). The one-year lagged paths between ST relationship and strength were both non-significant and thus were deleted from the final model. These statistically significant coefficients indicate that students with greater strengths have better relationships with teachers when the prior level of each construct was held constant. However, these relationships are relatively small, with strength uniquely explaining between 1.7% and 3% of the variance of ST relationship.

Prediction of Academic Achievement

GPA in 7th grade was regressed on the strength and ST relationship in 7th grade to assess the ability of strength and ST relationship to predict academic achievement. Both strength ($\beta = .39$, $p < .01$) and ST relationship ($\beta = .12$, $p < .01$) were significantly related to GPA, indicating that students with greater strengths and students with better relationships with teachers achieved higher GPAs in seventh grade. In addition, strengths demonstrated a significant indirect effect with grade point average through both mediating effects. The first indirect effect was statistically significant ($b = .035$, p

< .05 [95% CI = 0.003, 0.066]), indicating that higher strengths in 5th grade have a positive influence on GPA via 6th and 7th grade ST relationship, because they set a foundation for developing better ST relationship. In addition, the second indirect effect was statistically significant (*b* = .039, p < .05 [95% CI = 0.001, 0.072]), indicating that higher strengths in 5th grade and 6th grade also have a positive influence on GPA via 7th grade ST relationship, because they set a foundation for developing better ST relationship in the 6th grade. Overall, the model predicted 18% of the variance of grade point average, which can be considered a rather large proportion of variance, especially when considering the use of different informants in measuring different variables (i.e., parents–strength, students–ST relationship, teachers–GPA).

Discussion

The purposes of this study were to investigate the relationships between student–teacher relationships and behavioral and emotional strengths over time and to assess the efficacy of these two variables in predicting academic achievement. With respect to stability, both constructs demonstrated adequate stability over one- and two-year time periods. These results were expected, as previous long-term (six-month) test-retest reliability has indicated adequate stability (Epstein, Hertzog, & Reid, 2001; Lambert et al., 2015); however, this study extended the period over a two-year period. The students' perceptions of student–teacher relationships were stable over time and were congruent with the findings reported by others using Finnish samples (see Kämppi et al., 2012).

The study demonstrates that both behavioral and emotional strength and student–teacher relationship predicted academic achievement. In addition, greater behavioral and emotional strengths are related to the development of student–teacher

relationship, which, in turn, lead to greater academic achievement. In other words, strengths have positive effects on academic achievement for two reasons: (1) strengths directly influence achievement and (2) strengths seem to set a foundation upon which student–teacher relationships are built. There are a number of reasons why strengths would be directly related to academic achievement. For example, students with higher interpersonal strengths (i.e., student's ability to control emotions and behaviors in social situations), affective strengths (i.e., student's ability to accept affection from and express affection to others) and school functioning (i.e., completing tasks on time, completing homework, etc.) may be related to self-regulatory behavior in the classroom and at home (i.e., sit still in class and focus on teacher) (see also, Liew, 2012; Spinard & Eisenberg, 2009). Students who show more intrapersonal strength (i.e. is seen as having higher view of own competencies and accomplishments) may have a higher academic-related self-concept (see, e.g., Lappalainen & Hotulainen 2012). Lastly, students who have greater strengths related to family involvement may get more school-related support at home and have families that are more engaged with schools, which numerous studies have shown to be related to positive school outcomes (see, e.g., Collins & Laursen, 2004 or Collins, Maccoby, Steinberg, Hetherington, & Bornstein, 2000).

The results of this study highlight the need for teachers to be aware of how their behavior influences student outcomes (either positively or negatively) and how positive relationships can function as resiliency factors against school-related difficulties. In fact, Sutherland et al. (2010) argued that using a strength-based approach can improve teacher–student interaction and ameliorate challenging behavior. These results seem to confirm their position and furthermore suggest that if teachers, parents and other educational stakeholders focus on improving and bolstering student strengths, these

improvements may manifest in improved relationships and greater academic achievement. This can be also viewed from the fact that a positive student–teacher relationship is strongly associated with positive school outcomes (e.g., Liew, 2012). What seems to be the case is that home-identified strengths contribute to student–teacher relationships and that actual academic achievement may be particularly important to note for teachers' practical work. For example, a negative student–teacher relationship may have a long-lasting effect on a student via problematic behavior, low self-esteem and poor academic performance. Therefore, teachers should acknowledge the importance of the student perspective of the relationship and its impact on their work. In addition, it is reasonable to assume that the paradigm shift toward a strength-based perspective in teaching and also with home–school collaboration may improve the quality of teacher work, as strengths have a significant (albeit small) influence on students' academic achievement and how students view their relationships with teachers. We are quite sure that teachers have the ability to identify and highlight the strengths of their students, but what seems to be also very interesting is that teachers may be able influence students' academic achievement and the relationships with students by conveying the importance of parental strength identification to parents and perhaps using multi-informant sources of strength-based assessment for this purpose (see, e.g., Sointu et al., 2014). Therefore, we suggest that educational professionals consider strength identification as part of their teaching work and also as an important part of collaboration between homes and schools. However, these suggestions must be studied more thoroughly before any further discussion can take place.

The importance of viewing behavioral and cognitive processes as complementary instead of separate factors in teaching and learning has garnered

attention in the psychoeducational sciences (e.g., Liew, 2012). Educational professionals should consider the whole student in their work, including students' behavioral, emotional and learning skills, competencies, strengths and assets in teaching and learning. The results of the current study seem to give some credence to the complementary whole child perspective. In addition, Hotulainen et al. (2014) have suggested that, particularly for students with behavioral and/or learning challenges, a sole focus on academic learning skills and strengths may be problematic, as these students may not have possibilities to show other aspects of their individual strengths. The results of this study highlight the importance of behavioral and emotional strengths as important factors for student–teacher relationships and student academic achievement.

Limitations and Future Research

Several limitations of the current study should be noted. First, the phenomena investigated involved a sample of typical 5th grade students over a three-year period. Student status, such as special education designation, high risk status or clinical diagnosis, was not separately investigated in the study, and this needs to be addressed in future research. Second, even though the sample was sufficient for the analysis, its national representativeness can be questioned, because the sample came from only one region of Finland. However, as the between-school variance of academic outcomes in Finnish schools is the lowest in the world (approximately 2–5% of total variance) (Hautamäki, Kupiainen, Marjanen, Vainikainen, & Hotulainen, 2013), we can assume that the results of this study are generalizable to the national level. Third, as often is the case with longitudinal studies with several informants, the samples were unequal in size, leading to issues with missing data; however, we addressed these issues using full

information maximum likelihood as the estimation process for the model.

Additionally, as with all measures, further research studies need to be conducted on the psychometric properties of the BERS and SWBPQ measures and how these instruments predict other school-related behaviors. For example, the stability of emotional and behavioral strengths needs to be investigated with younger school samples, particularly kindergarten and first grade samples, to determine when these strengths emerge and how stable they are in the early grades. More specifically, researchers should investigate intra-individual change over the entire range of school grades with a particular focus on the early grades. Researchers might consider using accelerated growth modeling techniques to assess change over long periods of time (e.g., 1st grade through 12th grade). In addition, the current study needs to be replicated with other informants. For example, in assessing student–teacher relationships, it would be important to collect data from the teacher perspective; and in measuring student strengths, it would be important to collect ratings from teachers and students. Future research might include latent variables instead of manifest variables, where each latent variable is measured by indicators from multiple informants. Finally, this study should also be expanded to investigate other academically related measures, including standardized tests, special education status and attendance.

References

Baker, J. A. (2006). Contributions of teacher–child relationships to positive school adjustment during elementary school. *Journal of School Psychology, 44*(3), 211–229.

Baker, J. A., Grant, S., & Morlock, L. (2008). The teacher-student relationship as a developmental context for children with internalizing or externalizing behavior problems. *School Psychology Quarterly, 23*(1), 3–15

Beebe-Frankenberger, M., Lane, K. L., Bocian, K. M., Gresham, F. M., & MacMillan, D. L. (2005). Students with or at risk for problem behavior: Betwixt and between teacher and parent expectations. *Preventing School Failure, 49*(2), 10–17.

Bentler, P. M. (1990). Comparative fit indexes in structural models. *Psychological Bulletin, 107*(2), 238–246.

Berry, D., & O'Connor, E. (2010). Behavioral risk, teacher–child relationships, and social skill development across middle childhood: A child-by-environment analysis of change. *Journal of Applied Developmental Psychology, 31*(1), 1–14.

Bowers, T. (2006). The forgotten 'E' in EBD. In P. Clough, P. Garner, J. T. Pardeck & F. K. O. Yuen (Eds.), *Handbook of emotional and behavioural difficulties* (2nd ed., pp. 155–167). London, UK: Sage.

Bradley, R., Doolittle, J., & Bartolotta, R. (2008). Building on the data and adding to the discussion: The experiences and outcomes of students with emotional disturbance. *Journal of Behavioral Education, 17*(1), 4–23.

Bradley, R., Henderson, K., & Monfore, D. A. (2004). A national perspective on children with emotional disorders. *Behavioral Disorders, 29*(3), 211–223.

Brown, T. A. (2006). *Confirmatory factor analysis for applied research*. New York, NY: The Guildford Press.

Campbell, D., & Kenny, D. (1999). *A primer on regression artifacts*. New York, NY: Guilford Press.

Campbell, D., & Stanley, J. (1963). *Experimental and quasi-experimental designs for research*. Chicago, IL: RandMcNally.

Capern, T., & Hammond, L. (2014). Establishing positive relationships with secondary gifted students and students with emotional/behavioral disorders: Giving these diverse learners what they need. *Australian Journal of Teacher Education, 39*(4), 46–67.

Collins, W. A., & Laursen, B. (2004). Parent-adolescent relationships and influences. In R.M. Lerner & L. D. Steinberg (Eds.), *Handbook of adolescent psychology* (2nd ed., pp. 331–364). New York: Wiley.

Collins, W. A., Maccoby, E. E., Steinberg, L., Hetherington, E. M., & Bornstein, M. H. (2000). Contemporary research on parenting: The case for nature and nurture. *American Psychologist, 55*, 218–233.

Cullinan, D., & Sabornie, E. J. (2004). Characteristics of emotional disturbance in middle and high school students. *Journal of Emotional & Behavioral Disorders, 12*(3), 157–167.

Davis, H. A. (2003). Conceptualizing the role and influence of student-teacher relationships on children's social and cognitive development. *Educational Psychologist, 38*(4), 207–234.

Epstein, M. H. (2004). *Behavioral and Emotional Rating Scale: A strength-based approach to assessment* (2nd ed.). Austin, TX: PRO-Ed.

Epstein, M. H., Hertzog, M. A., & Reid, R. (2001). The Behavioral and Emotional Rating Scale: Long term test-retest reliability. *Behavioral Disorders, 26*(4), 314–320.

Geldhof, G. J., Bowers, E. P., & Lerner, R. M. (2013). Special section introduction: Thriving in context: Findings from the 4-H study of positive youth development. *Journal of Youth & Adolescence, 42*(1), 1–5.

Hamre, B. K., & Pianta, R. C. (2001). Early teacher–child relationships and the trajectory of children's school outcomes through eighth grade. *Child Development, 72*(2), 625–638.

Hamre, B. K., & Pianta, R. C. (2006). Student–teacher relationships. In G. G. Bear, & K. M. Minke (Eds.), *Children's needs III: Development, prevention, and intervention* (pp. 59–72). Bethesda, MD: NASP.

Harniss, M. K., & Epstein, M. H. (2005). Strength-based assessment in children's mental health. In M. H. Epstein, K. Kutash & A. J. Duchnowski (Eds.), *Outcomes for children and youth with emotional and behavioral disorders and their families. Programs and evaluation best practices* (2nd ed., pp. 125–141). Austin, TX: PRO-ed.

Harniss, M. K., Epstein, M. H., Ryser, G., & Pearson, N. (1999). The Behavioral and Emotional Rating Scale: Convergent validity. *Journal of Psychoeducational Assessment, 17*(1), 4–14.

Hautamäki, J., Kupiainen, S., Marjanen, J., Vainikainen, M., & Hotulainen, R. (2013). *Oppimaan oppiminen peruskoulun päättövaiheessa. Tilanne vuonna 2012 ja muutos vuodesta 2001. [Learning to learn at the end of basic education. Results in*

2012 and changes from 2001]. (No. Tutkimuksia 347). Helsinki, Finland: Helsingin yliopisto.

Hotulainen, R., & Lappalainen, K. (2011). Pre-school socio-emotional behaviour and its correlation to self-perceptions and strengths of young adults. *Emotional & Behavioural Difficulties, 16*(4), 365–381.

Hotulainen, R., Lappalainen, K., & Sointu, E. (2014). *Lasten ja nuorten vahvuuksien tunnistaminen [Identifying the strengths of children and youht].* In L. Uusitalo-Malmivaara (Ed.), *Positiivisen psykologian voima [Power of positive psychology]* (pp. 264–280). Jyväskylä, Finland: PS-kustannus.

Hu, L., & Bentler, P. M. (1999). Cutoff criteria for fit indexes in covariance structure analysis: Conventional criteria versus new alternatives. *Structural Equation Modeling, 6*(1), 1–55.

Hughes, J.N. (2011). Longitudinal effects of teacher and student perceptions of teacher-student relationship qualities on academic adjustment. *Elementary School Journal, 112*(1), 38–60.

Kämppi, K., Välimaa, R., Ojala, K., Tynjälä, J., Haapasalo, I., Villberg, J., . . . Kannas, L. (2012). *Koulukokemusten kansainvälistä vertailua 2010 sekä muutokset suomessa ja pohjoismaissa 1994–2010 – WHO-koululaistutkimus [International comparative study of school experiences 2010 and changes in Finland and in the Nordic countries 1994–2010 – WHO student study]* (HBSC-study). Helsinki, Finland: Finnish National Board of Education.

Kauffman, J. M., & Landrum, T. J. (2013). *Characteristics of emotional and behavioral disorders of children and youth. International edition* (10th international ed.). Upper Saddle River, NJ: Pearson.

Konu, A., Alanen, E., Lintonen, T., & Rimpelä, M. (2002). Factor structure of the school well-being model. *Health Education Research, 17*(6), 732–742.

Konu, A., & Lintonen, T. P. (2006). School well-being in grades 4-12. *Health Education Research, 21*(5), 633–642.

Ladd, G. W., & Burgess, K. B. (2001). Do relational risks and protective factors moderate the linkages between childhood aggression and early psychological and school adjustment? *Child Development, 72*(5), 1579–1601.

Lambert, M.C., Savolainen, H., Sointu, E.T., Lappalainen, K., & Epstein, M.H. (2015). Long-term reliability of the Finnish behavioral and emotional rating scale. *Social Welfare Interdisciplinary Approach, 5*(1), 125–132.

Lane, K. L., Carter, W., Pierson, M. R., & Glaeser, B. C. (2006). Academic, social, and behavioral characteristics of high school students with emotional disturbances or learning disabilities. *Journal of Emotional & Behavioral Disorders, 14*(2), 108–117.

Lappalainen, K., & Hotulainen, R. (2012). Participation in part–time special education and its correlation with the educational paths, self-concepts and strengths of young adults. *British Journal of Special Education, 39*(4), 185–193.

Lappalainen, K., Savolainen, H., Kuorelahti, M., & Epstein, M. H. (2009). An international assessment of the emotional and behavioral strengths of youth. *Journal of Child and Family Studies, 18*(6), 746–753.

Lerner, R. M., Bowers, E. P., Geldhof, G. J., Gestsdóttir, S., & DeSouza, L. (2012). Promoting positive youth development in the face of contextual changes and challenges: The roles of individual strengths and ecological assets. *New Directions for Youth Development, 135*, 119–128.

Liew, J. (2012). Effortful control, executive functions, and education: bringing self-regulatory and social-emotional competencies to the table. *Child development perspectives 6*(2), 105–111.

Liu, Y., Li, X., Chen, L., & Qu, Z. (2015). Perceived positive teacher-student relationship as a protective factor for Chinese left-behind children's emotional and behavioural adjustment. *International Journal of Psychology*, *50*(5), 354–362.

Luthar, S. S., Crossman, E. J., & Small, P. J. (in press). Resilience and adversity. In M. Lerner (Ed.), M. Lamb (Vol. Ed.), *Handbook of child psychology and developmental science* (7th ed.). New York, NY: Wiley.

Meehan, B. T., Hughes, J. N., & Cavell, T. A. (2003). Teacher–student relationships as compensatory resources for aggressive children. *Child Development, 74*(4), 1145–1157.

Murray, C., & Murray, K.M. (2004). Child level correlates of teacher-student relationships: An examination of demographic characteristics, academic orientations, and behavioral orientations. *Psychology in Schools*, *41*(7), 751–762.

Muthén, L. K., & Muthén, B. O. (1998–2013). *Mplus user's guide, seventh edition.* Los Angeles, CA: Author.

Nelson, J. R., Benner, G. J., Lane, K., & Smith, B. W. (2004). Academic achievement of K-12 students with emotional and behavioral disorders. *Exceptional Children, 71*(1), 59–73.

O'Connor, E.E., Dearing, E., & Collins, B.A. (2011). Teacher-child relationship and behavior problem trajectories in elementary school. *American Educational Research Journal*, *48*(1), 120–162.

Oliver, R. M., Cress, C. J., Savolainen, H., & Epstein, M. H. (2014). Strength-based assessment issues, tools, and practices in school-related contexts and schools in the United States and Finland. In H. M. Walker, & F. M. Gresham (Eds.), *Handbook of evidence-based practices for emotional and behavioral disorders. Applications in schools* (pp. 229–243). New York, NY: The Guildford Press.

Pakarinen, E., Aunola, K., Kiuru, N., Lerkkanen, M.-K., Poikkeus, A.M., Siekkinen, M., & Nurmi, J.E. (2014). The cross-lagged associations between classroom interactions and children's achievement behaviors. *Contemporary Educational Psychology*, *39*, 248–261.

Pianta, R. C., & Stuhlman, M. W. (2004). Teacher-child relationships and children's success in the first years of school. *School Psychology Review, 33*(3), 444–458.

Quinn, M. M., Kavale, K. A., Mathur, S. R., Rutherford, R. B., & Forness, S. R. (1999). A meta-analysis of social skill interventions for students with emotional or behavioral disorders. *Journal of Emotional & Behavioral Disorders, 7*(1), 54–64.

Rashid, T., & Ostermann, R. F. (2009). Strength-based assessment in clinical practice. *Journal of Clinical Psychology, 65*(5), 488–498.

Reid, R., Gonzalez, J. E., Nordness, P. D., Trout, A., & Epstein, M. H. (2004). A meta-analysis of the academic status of students with emotional/behavioral disturbance. *Journal of Special Education, 38*(3), 130–143.

Resnick, M. D., Bearman, P. S., Blum, R. W., Bauman, K. E., Harris, K. E., Jones, J., . . . Udry, J. R. (1997). Protecting adolescents from harm: Findings from the national longitudinal study on adolescent health. *Journal of the American Medical Association, 278*(10), 823–832.

Roorda, D.L., Koomen, H.M.Y., Spilt, J.L., & Oort, F.J. (2011). The influence of affective teacher-student relationships on students' school engagement and achievement: A meta-analytic approach. *Review of Educational Research, 81*(4), 493–529.

Rutter, M. (1987). Psychosocial resilience and protective mechanisms. *American Journal of Orthopsychiatry, 57*(3), 316–331.

Rutter, M. (2006). Implications of resilience concepts for scientific understanding. *Annals of the New York Academy of Sciences, 1049*, 1–12.

Rutter, M. (2012). Resilience as a dynamic concept. *Development & Psychopathology, 24*(2), 335–344.

Savolainen, H., Nordness, P., Sointu, E. T., Lappalainen, K., & Epstein, M. H. (2013). Convergent validity of the Finnish Behavioral and Emotional Rating Scale-2 with teachers and parents as raters. *Journal of International Special Needs Education, 16*(2), 94–101.

Snyder, C. R., Ritschel, L. A., Rand, K. L., & Berg, C. J. (2006). Balancing psychological assessments: Including strengths and hope in client reports. *Journal of Clinical Psychology, 62*(1), 33–46.

Sointu, E. T., Savolainen, H., Lambert, M. C., Lappalainen, K., & Epstein, M. H. (2014). Behavioral and emotional strength-based assessment of Finnish elementary students: Psychometrics of the BERS-2. *European Journal of Psychology of Education, 29*(1), 1–19.

Sointu, E. T., Savolainen, H., Lappalainen, K., & Epstein, M. (2012). Parent, teacher and student cross informant agreement of behavioral and emotional strengths:

Students with and without special education support. *Journal of Child & Family Studies, 21*(4), 682–690.

Spinard, T. L., & Eisenberg, N. (2009). Empathy, prosocial behavior, and positive development in schools. In R. Gilman, E. S. Huebner, & M. J. Furlong (Eds.), *Handbook of positive psychology in schools* (pp. 119–129). New York, NY: Routledge.

Steiger, J. H., & Lind, J. C. (1980, May). *Statistically based tests for the number of common factors.* Paper presented at the annual meeting of the Psychometric Society, Iowa City, IA.

Sutherland, K. S., Conroy, M., Abrams, L., & Vo, A. (2010). Improving interactions between teachers and young children with problem behavior: A strengths-based approach. *Exceptionality, 18*(2), 70–81.

Trout, A. L., Nordness, P. D., Pierce, C. D., & Epstein, M. H. (2003). Research on the academic status of children with emotional and behavioral disorders: A review of the literature from 1961 to 2000. *Journal of Emotional and Behavioral Disorders, 11*(4), 198–210.

Trout, A. L., Ryan, J. B., La Vigne, S. P., & Epstein, M. H. (2003). Behavioral and emotional rating scale: Two studies of convergent validity. *Journal of Child & Family Studies, 12*(4), 399–410.

Wehby, J. H., Symons, F. J., Canale, J. A., & Go, F. J. (1998). Teaching practices in classrooms for students with emotional and behavioral disorders: Discrepancies between recommendations and observations. *Behavioral Disorders, 24*(1), 51–56.

Werner, E. E., & Smith, R. S. (2001). *Journeys from childhood to midlife*. Ithaca, NY: Cornell University Press.

Zee, M., Koomen, H. M. Y., & Van der Veen, I. (2013). Student–teacher relationship quality and academic adjustment in upper elementary school: The role of student personality. *Journal of School Psychology, 51*(4), 517–533.

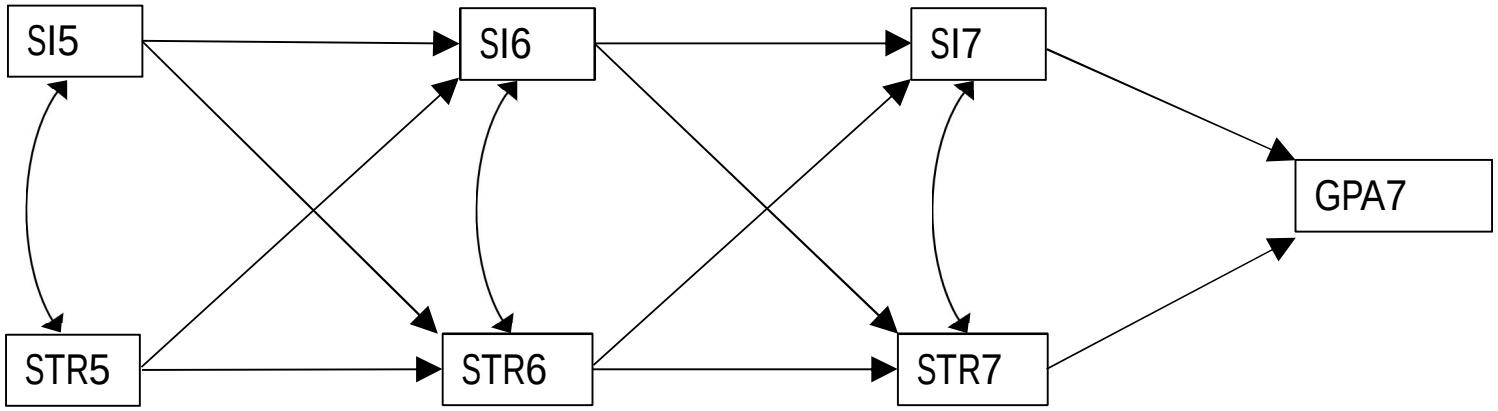

Fig. 1 Conceptual figure of tested relationships.
Note. *SI* = Parent rated behavioral and emotional strengths, *STR* = Student-teacher relationship. *GPA* = grade point average. Number represents the grade of students.

Table 1

Sample correlation matrix, means (M) and standard deviations (SD).

	1.	2.	3.	4.	5.	6.	7.	*M*	*SD*
1. SI (T1)	-	.78	.71	.15	.22	.23	.35	2.29	.31
2. SI (T2)		-	.74	.12	.20	.21	.32	2.24	.33
3. SI (T3)			-	.05	.20	.24	.39	2.25	.34
4. STR (T1)				-	.54	.35	-.05	2.60	.41
5. STR(T2)					-	.55	.12	2.56	.45
6. STR (T3)						-	.19	2.49	.46
7. GPA							-	7.96	1.07

Note. *SI* Strength Index (parent rated), *STR* Student-Teacher Relationship (student perception), *GPA* Grade Point Average (teacher evaluations), T1 = Measurement 1 (5th grade), T2 = Measurement 2 (6th grade), T3 = Measurement 3 (7th grade).

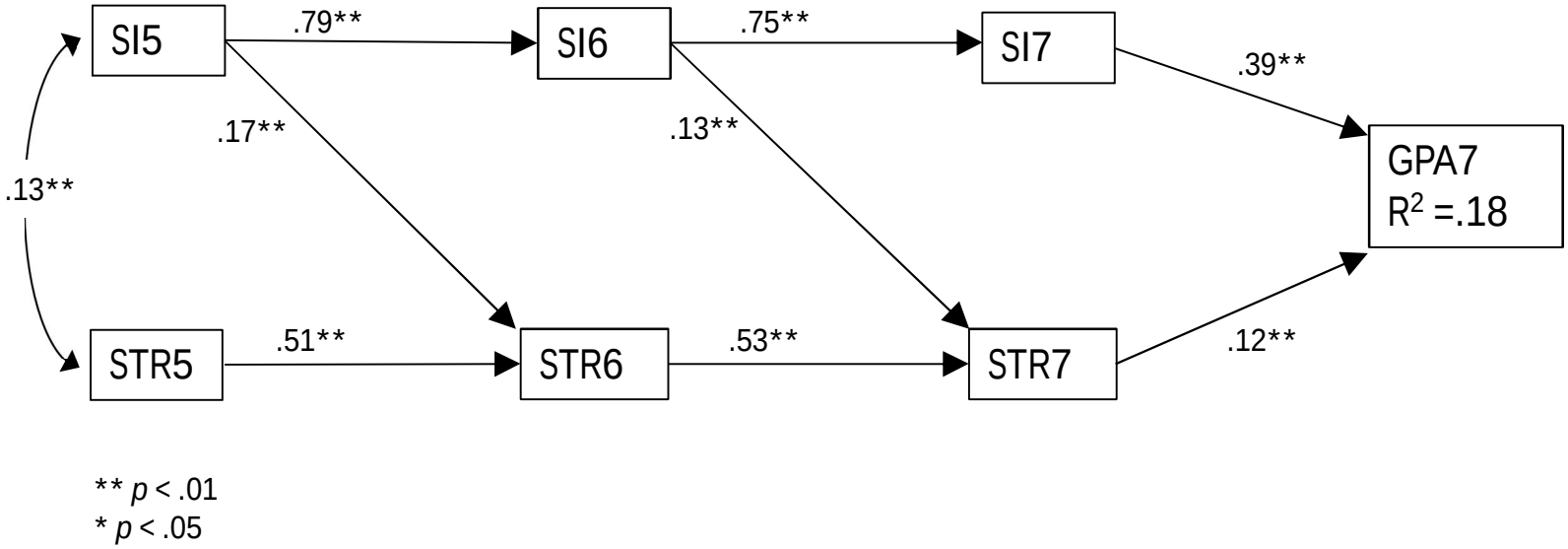

Fig. 2 A longitudinal cross-lagged path model. χ^2_{12}= 33.47, p=0.0008, CFI =.97, TLI = .95, RMSEA = .05, SRMR = .040. Strength Index (parent rated) = SI, student-teacher relationship (student perception) = STR, Grade Point Average (teachers' evaluations) = GPA. Number behind variable name indicates grade: 5 = 5th grade (T1), 6 = 6th grade (T2), 7 = 7th grade (T3).