JYX JYVÄSKYLÄN YLIOPISTO UNIVERSITY OF JYVÄSKYLÄ

This is a self-archived version of an original article. This version may differ from the original in pagination and typographic details.

Author(s): Kujala, Jan; Alexandrou, Anna Maria; Lapinkero, Hanna-Maija; Stigsdotter-Neely, Anna; Sipilä, Sarianna; Parviainen, Tiina

Title: Beta-band MEG signal power changes in older adults after physical exercise program with and without additional cognitive training

Year: 2023

Version: Published version

Copyright: © 2022 The Author(s). Published by Elsevier Inc.

Rights: CC BY 4.0

Rights url: https://creativecommons.org/licenses/by/4.0/

Please cite the original version:

Kujala, J., Alexandrou, A. M., Lapinkero, H.-M., Stigsdotter-Neely, A., Sipilä, S., & Parviainen, T. (2023). Beta-band MEG signal power changes in older adults after physical exercise program with and without additional cognitive training. Brain and cognition, 165, Article 105929. https://doi.org/10.1016/j.bandc.2022.105929

Brain and Cognition 165 (2023) 105929

Contents lists available at ScienceDirect

Brain and Cognition

journal homepage: www.elsevier.com/locate/b&c

Beta-band MEG signal power changes in older adults after physical exercise program with and without additional cognitive training

Jan Kujala [a,b,1], Anna Maria Alexandrou [a,b,1], Hanna-Maija Lapinkero [a,b], Anna Stigsdotter-Neely [c,d], Sarianna Sipilä [e], Tiina Parviainen [a,b,*]

[a] Department of Psychology, University of Jyväskylä, Jyväskylä, Finland
[b] Centre for Interdisciplinary Brain Research (CIBR), Faculty of Education and Psychology, University of Jyväskylä, Jyväskylä, Finland
[c] Department of Health, Learning and Technology, Luleå University of Technology, Luleå, Sweden
[d] Department of Social and Psychological Studies, Karlstad University, Karlstad, Sweden
[e] Gerontology Research Center and Faculty of Sport and Health Sciences, University of Jyväskylä, Jyväskylä, Finland

ARTICLE INFO

Keywords:
Magnetoencephalography
Intervention
Oscillations
Working memory
Inhibition
Aging

ABSTRACT

Physical exercise has been considered to be an efficient mean of preserving cognitive function and it influences both the structural and functional characteristics of the brain. It has especially been shown to increase brain plasticity, the capacity to re-structure brain properties in response to interaction, such as cognitive practice. Studies have also examined the potential additive effect of cognitive training on the documented benefit of physical exercise, commonly, however, not at the neural level. We monitored, using magnetoencephalography (MEG), the brain processes associated with executive functions in older individuals who participated in a 12-month randomized controlled trial including two research arms: physical and cognitive training *vs* physical training alone. Measurements were conducted at 0 months, 6 months, and 12 months. The addition of cognitive training was associated with better performance in the Stroop test that reflects executive control. The extra benefit of cognitive training was also manifested as decreased modulation of beta frequency band (15–25 Hz) especially to difficult distractors. As beta band activity is associated with attentional control, this indicates fewer resources needed to inhibit irrelevant sensory inputs. These results imply an enhancing role of cognitive elements integrated with physical training in improving or maintaining executive functions in older individuals.

1. Introduction

Aging is associated with a decline in cognitive function (Hedden & Gabrieli, 2004), evidenced by decline in behavioral and neuropsychological performance level (Brennan et al., 1997; Troyer et al., 1994). Particularly, older individuals are less successful in maintaining an item in working memory and subsequently in retrieving it in a task-specific manner (Bherer, 2015). In part, such impairments in working memory are due to an inability to inhibit irrelevant sensory inputs that compete with the item to be kept in memory (Collette et al., 2009). The age-related deterioration in cognitive performance most likely stems from structural changes in the brain, manifested as losses of grey and white matter volume especially in frontal cortical areas (Lupien et al., 1998; Penke et al., 2010) and less efficient synaptic transmission (Bäckman et al., 2010). Even though the impact of aging on cortical function remains poorly understood, increasing evidence point to notable aging-related changes in spontaneous cortical oscillatory activity measured by electroencephalography (EEG) and magnetoencephalography (MEG) (Bamidis et al., 2014; Berendse et al., 2000; Cummins & Finnigan, 2007; Finnigan & Robertson, 2011; Vlahou et al., 2014).

The physiological changes in cortical structure and function may signify memory disorders, such as Alzheimer's disease (Bäckman et al., 2005; Lupien et al., 1998), but the neurocognitive capacity as well as brain structure and function vary greatly also within healthy aging populations (Aine et al., 2011). Several lifestyle-related factors contribute to this variability, and especially regular physical activity has been suggested to prevent or delay age-related cognitive decline (Bherer et al., 2013). For example, aerobic training has been shown to improve cardiorespiratory fitness and this improvement is associated with enhanced performance in neurocognitive tasks (Hotting & Roder, 2013).

* Corresponding author at: Department of Psychology, University of Jyväskylä, P.O. Box 35, FI-40014, Finland.
E-mail address: tiina.m.parviainen@jyu.fi (T. Parviainen).
[1] Authors contributed equally to this work.

https://doi.org/10.1016/j.bandc.2022.105929
Received 21 June 2022; Received in revised form 26 October 2022; Accepted 3 November 2022
Available online 24 November 2022
0278-2626/© 2022 The Author(s). Published by Elsevier Inc. This is an open access article under the CC BY license (http://creativecommons.org/licenses/by/4.0/).

The effect of physical exercise on cognition may be indirect, relating to the assimilation of healthy lifestyle habits and the decrease of stress and other conditions that are detrimental to cognitive capacity (van der Zwan et al., 2015). However, evidence from brain imaging studies favors the notion that physical exercise has also a direct effect on brain function and structure (Ahlskog et al., 2011; Bherer et al., 2013; Rottensteiner et al., 2015; Tamura et al., 2015; Ruotsalainen et al., 2021). Specifically, our earlier MEG study demonstrated linkage between physical activity levels and the task-related allocation of neural oscillations (Hernández et al., 2021). Moreover, physical exercise has been shown to be associated with an increase in task-related activity of brain regions involved in attentional control as well as increased functional connectivity in large-scale brain networks underlying executive function (Erickson et al., 2015).

In addition to interventions that focus on physical exercise to prevent cognitive decline in aging populations, cognitive training itself may positively influence cognitive function (Joubert & Chainay, 2018). Indeed, cognitive training that selectively engage speed of processing, memory, attention and perception have been shown to improve reaction time, processing speed, working memory, executive function, memory, visual spatial ability, and attention (Barnes et al., 2009; Desjardins-Crepeau et al., 2016; Joubert & Chainay, 2018; Kueider et al., 2012; Rahe et al., 2015). Even though the effectiveness of cognitive training seems uncontested, its transferability to other tasks that one encounters in every-day life has proven quite poor (Melby-Lervåg & Hulme, 2013). Accordingly, it has been suggested that physical exercise yields more general effects on cognitive function whereas the domain-specific cognitive training more selectively targets processes and tasks trained during the intervention (Desjardins-Crepeau et al., 2016). Given these complementary effects on cognition, recent studies have applied interventions that utilize both physical exercise and cognitive training (Rieker et al., 2022; ten Brinke et al., 2020; Yu et al., 2021), and demonstrate positive effects on cognition (for review, see, e.g., Zhu et al., 2016) especially regarding executive functions (Rieker et al., 2022).

Neuroimaging studies have also attempted to resolve the brain-level changes associated with combined physical and cognitive training by examining brain volume (Adcock et al., 2020) and hemodynamic responses (Nishiguchi et al., 2015). However, whether neural oscillatory activity, which directly underlies working memory and inhibition, is influenced by physical exercise with added cognitive training, has not been studied. It is well established that modulations of band-limited cortical signal power are potent biomarkers of executive and memory functions in both young (Jensen et al., 2002) and older individuals (Proskovec et al., 2016). Moreover, it has been shown that MEG allows the quantification of learning and training related neural modulations also in adult populations (Hulten et al., 2009; Hultén et al., 2014).

In this study, we examined the influence associated with the addition of cognitive training to physical exercise compared to physical training alone from the perspective of task-related oscillatory activity. Specifically, we monitored, using MEG, the task-related modulations associated with working memory and inhibition in older individuals, measured before, during (6 months) and after (12 months) a 12-month physical exercise program which was performed either with or without additional cognitive training. We hypothesized that the group of individuals who received the additional cognitive training would demonstrate added benefit at two distinct levels: the behavioral level, manifested through enhanced executive control, as well as the neural level, reflected as differential task-specific neural activation between the two groups. We expected that these effects would be manifested as modulations in neural activation in frequency bands that have been associated with general cognitive processing and executive control (spanning the 1 – 45 Hz frequency range, see, e.g., Honkanen et al., 2015; Rojas et al., 2000; Roux & Uhlhaas, 2014). We hypothesized that differences in neural activity would indicate more efficient brain function for the given cognitive process in the group with additional cognitive training, and that this effect would be visible both at 6 months and 12 months post-intervention.

2. Materials and methods

2.1. Participants

All participants of a large-scale randomized controlled trial (the PASSWORD, ISRCTN52388040, n = 314 recruited through the Finnish National Registry) were invited to the study. Twenty-eight older individuals (19 women; mean 74.6 years, range 71.1 – 82.7 years) gave their informed consent to participate in the MEG experiment and were randomly assigned to the two study groups. No prior estimates of effect size existed for the phenomenon studied here. Therefore, we pre-specified the sample size for alpha level 0.05 with statistical power of 0.8 to be at least 20 participants, which was estimated to be sufficient based on power analyses utilizing the effect sizes from previous MEG work that focused on pre-post training differences in healthy individuals (van Dyck et al., 2021) and group differences in neural based disorders (Helenius et al., 2009). The inclusion and exclusion criteria of participants were the same, as for the original PASSWORD study, whose aim was to investigate the effects of physical activity and cognitive training interventions on walking speed and falls in older adults who did not meet physical activity guidelines (Sipilä et al., 2021). Inclusion criteria were: 70–85 year old; dwelling in the community; able to walk 500 m without assistance; sedentary or at most moderately active (<150 min of walking/week; no attendance in resistance training) and a score of 24 points or higher in the Mini Mental State Examination test. Exclusion criteria were: severe chronic condition or medication affecting cognitive and/or physical function; contraindication for physical exercise or walking tests; behavioral factors that in the judgment of the PI and the study physician may compromise participation in the study; excessive use of alcohol; difficulty in communication; another member of the household participating in the PASSWORD. Additionally, the following exclusion criteria were used for the MEG measurements: left-handed, body height above 180 cm, implant including metal, medication affecting central nervous system, motor impairment in hand or lower limb, dyslexia, and being bilingual. Ethical approval for the study was received from the review board at the Ethical Committee of Central Finland Health Care District (14/12/2016, ref.: 11/2016). All participants gave their written informed consent before taking part in the study.

2.2. Intervention protocols

The 28 participants were randomly assigned to the two study groups of equal sample size (n = 14) (Fig. 1). The assignment to the groups was done at the large-scale sample level and was conducted via a computer-generated random allocation sequence of twofold stratification by gender and age (70–74, 75–79, 80–85) with randomly varying blocks of two and four. The PT group participated in physical training only, whereas the physical and cognitive training group (PTCT) participated in both physical and cognitive training. Table 1 shows the demographics of the two groups. All participants had a MMSE score of at least 26, and there were no statistical differences ($p > 0.05$, independent samples *t*-test and Pearson Chi-Square) between the two groups except for the subjects' age that was higher for the PT group ($p = 0.017$).

Two participants from the PTCT group (both women) dropped out 6 months after the beginning of the intervention and one woman dropped out at 12 months after the beginning of the intervention in the PTCT group. One of these subjects dropped out due to lower limb pain and two due to lack of interest to participate in the training. Thus, the complete data set was available for 14 participants in the PT group and 11 participants for the PTCT (Fig. 1).

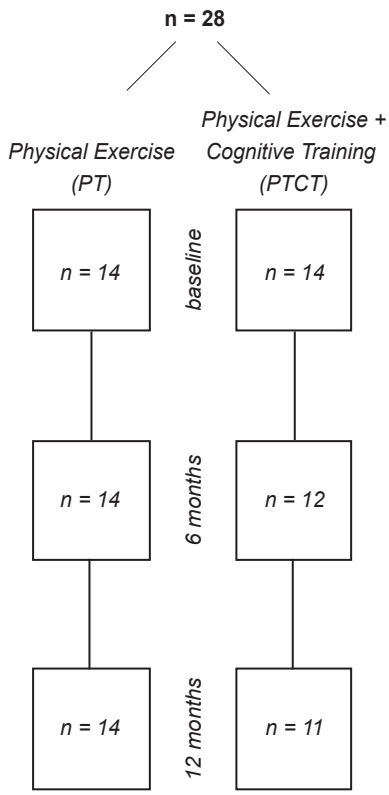

Fig. 1. Graphical depiction of the division of the participants into two intervention groups (physical exercise only: PT; physical exercise with the addition of cognitive training: PTCT) and of the sample size for each of the three MEG measurement sessions (0 months, 6 months and 12 months after the start of the intervention).

Table 1
Summary of demographic and background data.

Demographics	PT	PTCT
Number of participants	14	14
Women, N	8	10
Age, years (SD)	75.9 (3.2)	73.2 (2.2)
MMSE (SD)	27.6 (0.9)	28 (1.7)
Education, N		
Low	1	1
Moderate	11	11
High	2	2
Self-rated health, n (%)		
Very good	1	1
Good	6	6
Average	7	7
Walking exercise compliance, %	58	62
Resistance exercise compliance, %	72	77

2.2.1. Physical exercise

Multicomponent physical exercise program (Sipilä et al., 2018) was adapted from the physical activity guidelines for older adults, earlier studies focusing on resistance training and the LIFE-study (Nelson et al., 2007; Pahor et al., 2014; Portegijs et al., 2008). Interventions included supervised training sessions at the research center two times a week. One session (45 min) consisted of walking and dynamic balance training: the participants walked for 5 min at a self-selected speed and 10–20 min at a target intensity of somewhat hard to hard (13–15 on the Borg scale); the dynamic balance exercises during this session lasted for 10 min and were of increasing difficulty. The other session (1 h) consisted of resistance and balance training. The resistance training utilized air pressure technology and was aimed at increasing muscle strength and power by allowing progressive increase in the training if the predefined number of repetitions was exceeded. In addition to the center-based sessions, the physical exercise program included progressive home exercises (20–30 min each, 2–3 times per week). These exercises included balance and strengthening exercises as well as stretching for major muscle groups. The participants were also instructed to conduct moderate aerobic activity in stints of at least 10 min and amounting to a total of 150 min per week. The 12-month physical exercise period was split into 6 periods lasting two months each. The intensity, volume and specificity of the physical exercises varied across these 6 periods, with the aim to develop and maintain gains in physiological capacity and prevent the occurrence of fatigue.

2.2.2. Cognitive training

Computer-based cognitive training (CT) program (see also Sipilä et al., 2018) was built on the unity/diversity model of executive functions proposed by (Miyake & Friedman, 2012). It consisted of a web-based in-house developed computer program (iPASS) modified from that used in the FINGER study (Dahlin et al., 2008; Kivipelto et al., 2013; Ngandu et al., 2015) and it targeted inhibition, set-shifting and updating of working memory. Participants were instructed to do the tasks as quickly and as accurately as possible 3–4 times a week. One training session lasted for 15–25 min depending on participants' skills and performance. The training sessions were organized in two distinct blocks that alternated between sessions, thus avoiding learning effects and maintaining participants' engagement. Block 1 included letter updating, predictable set-shifting, spatial working memory maintenance, and color inference task to train inhibition. Block 2 included spatial updating, unpredictable set-shifting, spatial working memory maintenance, and number inference task to train inhibition. Task difficulty for other than the two shifting-tasks was adjusted individually based on the prior performance level. The participants who were able to do so conducted the cognitive training at home, whereas participant who did not have access to a computer at home could train at the University computer class and/or one of ten locations provided by the City of Jyväskylä.

2.3. Behavioral measurements

Behavioral measurements assessing executive functions included the Consortium to Establish a Registry for Alzheimer's Disease (CERAD) total score, the Stroop test and the Trail Making Test (TMT) A and B. CERAD was performed at baseline (0 months) and at 12 months and Stroop and TMT at 0, 6 and 12 months.

The CERAD subtests included Category Verbal Fluency, Modified Boston Naming Test (BNT), Mini Mental State Examination (MMSE), Word List Memory, and Constructional Praxis, based on which the CERAD total score can be computed (maximum score = 100) (Chandler et al., 2005). In the three conditions of *Color Stroop test*, measuring inhibition (Graf et al., 1995; Scarpina & Tagini, 2017) participants are instructed to read aloud words printed in black ink, read aloud the color of colored letter X's, or to name the color of words printed in incongruent colored inks and ignore the literal meaning of the word. The time taken to complete each condition was recorded and the time difference between the third and the second condition was calculated (Stroop difference). The *TMT* specifically assesses the ability to efficiently switch between tasks (Bowie & Harvey, 2006). The TMT A evaluates psychomotor speed and involves drawing a line connecting numbered circles. The TMT B, in turn consists of circles with numbers and letters and requires set switching between items. The time to complete each task was recorded and the time difference to complete Part B and Part A was calculated (Trail Making Test B-A).

2.4. MEG measurements

MEG measurements were performed at baseline (0 months) and 6 and 12 months thereafter. All three MEG measurement sessions involved

the same cognitive task engaging short-term memory skills for the encoding of a face image and subsequent distractor inhibition.

2.4.1. Stimuli

The MEG experimental paradigm consisted of a working memory and inhibition task involving visual images and it was designed to sequentially engage the cognitive processes of encoding and maintenance, inhibitory control and retrieval. Participants were shown three images: an encoder image representing a male or a female face, a distractor (a face of the same sex to the encoder image or a grey oval shape), and a target image representing either a male or a female face (sex matched to the encoder image). After the target image was presented, the participants' task was to indicate with a button press whether the encoder image and the target image were identical.

The stimuli were 60 unique images of male and female faces taken from the Karolinska Emotional Faces database (Goeleven et al., 2008; Lundqvist et al., 1998). All facial stimuli represented a neutral facial expression. To increase the difficulty of the task hair border and any other specific distinguishing features were removed, and only basic face characteristics were preserved. The experimental task was designed to probe short-term memory: all face stimuli were unfamiliar to the participants prior to the experiment and hence they could not rely on long-term memory retrieval during the task. During the experiment, each face was used four times as the encoder and distractor in a balanced number. The distractor image was always different than the encoder image. Both target and distractor images were always matched to the sex of the encoder image.

2.4.2. Experimental procedure

Participants performed a total of 240 experimental trials involving both male and female faces (120 trials for each sex). The total number of trials was divided into 4 blocks of 60 trials each. Between blocks participants had the opportunity to rest for a few minutes.

A single trial (Fig. 2) consisted of a fixation cross presented for 1000 ms (100 ms jitter), followed by the encoder image presented for 500 ms, a second fixation cross presented for 2000 ms (100 ms jitter), the distractor image presented for 500 ms and a third fixation cross presented for 1000 ms (100 ms jitter). Subsequently, the target image was shown for 500 ms. A visually presented question mark prompted the participants to indicate within a 2000-ms time-window whether the target image was identical or non-identical to the encoder image (i.e., there were separate buttons for "yes" and "no" answers). Accuracy scores were later computed (see 2.5). During the experiment, participants were instructed to remain still and to keep their gaze on a fixation point projected on a screen at ~1 m from their sitting position.

2.4.3. MEG data recordings

MEG data was collected using a 306-channel whole head Elekta Neuromag system (Elekta Oy, Helsinki, Finland) in a magnetically shielded room (VacuumSchmelze GmbH, Hanau, Germany) at the Jyväskylä Centre for Interdisciplinary Brain Research. Data were filtered at 0.03 – 500 Hz and sampled at 1000 Hz. The participants were seated, with the head covered by the MEG helmet. Each participan''s head position with respect to the MEG sensor array was determined by attaching five head position indicator coils to the scalp and briefly energizing them before the measurement. The coil locations were determined in reference to anatomical landmarks (nasion and right/left preauricular points) using a 3-D digitizer (Isotrak 3S1002, Polhemus Navigation Science). Blinks and eye movements (saccades) during the MEG measurement were monitored using electro-oculography (EOG).

2.5. Behavioral data analysis

Statistical analyses were carried out in IBM SPSS Statistics for Mac, version 26 (IBM Corp., Armonk, N.Y., USA). We performed Linear Mixed Effects modeling with session (0, 6, and 12 months) and training type (PT, PTCT) as well as their interaction as Fixed effects to determine the possible differences between the two types of intervention on the behavioral performance (TMTA, TMB, TMTB-A, Stroop difference). For measures showing significant effects of training type, we tested for possible group-differences separately at each time point using the Mann Whitney *U* test. For the CERAD total score data that were available only at 0 and 12 months, the effects of measurement point and training type were tested by using the Wilcoxon Signed Rank Test and Mann Whitney *U* test, respectively.

2.6. MEG data analysis and statistical analysis

Preprocessing: MEG data preprocessing and subsequent analysis was carried out using the MNE Python toolbox (Gramfort et al., 2013) implemented in Python computing environment, unless stated otherwise. Only gradiometers were included in MEG data analysis as they have a narrow spatial sensitivity pattern and are optimal for recording data from superficial sources. MaxFilter (Elekta Oy) was used to remove external disturbances from the MEG data with spatiotemporal signal space separation (tSSS) and transformation of all participants' head

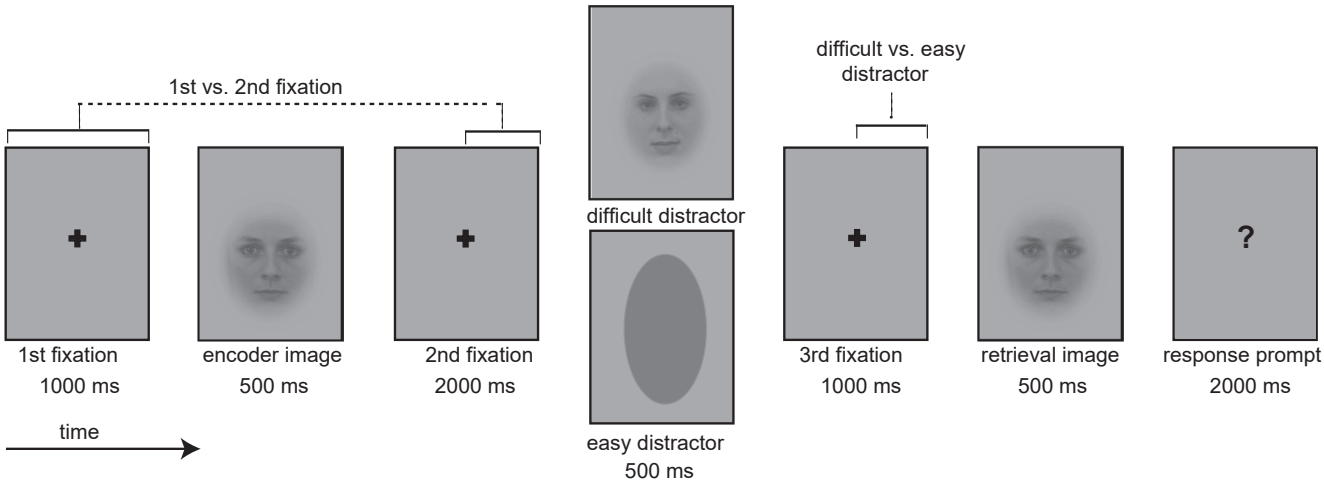

Fig. 2. Experimental task and the graphical depiction of the time-windows of interest within the experimental task. TFRs were computed for the time-windows of the first, second and third fixations; these TFRs were contrasted between the first and second fixation and within the third fixation, depending on whether an easy or a difficult distractor was presented.

position to one reference head position (Taulu & Simola, 2006). Finally, independent component analysis (fastICA) (Hyvärinen, 1999) was used to reduce artifacts of ocular and cardiac origin.

Prior to further analysis, we discarded trials in which the behavioral response occurred too early: in these false alarm trials motor activity associated with the button press would obscure neural activity relative to the cognitive processes of interest.

Extracting MEG activity measures: To extract brain activation associated with working memory and inhibitory control before and after intervention we analyzed the modulation of MEG signal power associated with 1) stimulus encoding and maintenance, and 2) inhibition of an easy (a grey oval shape) and a difficult (a face image) distractor across the different measurement sessions (0 months, 6 months and 12 months).

First, time–frequency representations (TFRs) were computed in the 1 – 90 Hz frequency range based on Morlet wavelets; half a cycle per Hz for the 1000 ms-long fixation time preceding and succeeding the encoder image as well as for the last 500 ms of the fixation time following the distractor image (total duration 1000 ms) (see Fig. 2). Second, modulations in neural activity reflecting encoding and maintenance of an image were evaluated by testing for statistically significant differences in TFRs between the first and second fixation (i.e. before *vs* after encoding image) (Fig. 2). Third, modulations in neural activity reflecting the ability to suppress interference from different types of distractors were examined by contrasting TFRs within the last 500 ms of the third fixation grouped by the type of distractor (i.e. easy *vs* difficult distractor) (Fig. 2).

Statistical analysis: For each of these comparisons, statistically significant differences were extracted using a cluster-based permutation test (1000 permutations; statistical threshold: alpha = 0.05; clustering threshold: F = 8.0) that was implemented in distinct frequency bands of interest (1 – 30 Hz, 8 –13 Hz, 15 – 25 Hz, 35 – 45 Hz, 60 – 90 Hz). Statistical testing for each of the comparisons was done in two ways: First, based on averaging across each *frequency band of interest*, thus obtaining one value per frequency range across all time points of interest (referred as time-sensitive TFR statistical analysis) and second, based on averaging across all *time points in each time-window of interest*, yielding one value per frequency bin across the frequency range of interest (referred as frequency-sensitive TFR statistical analysis). These approaches were complementary: The time-sensitive analysis allows the identification of time-intervals in which the whole frequency bands of interest show modulation of neural activity across conditions, whereas the frequency-sensitive analysis allows the identification relevant frequency components within these bands.

Any potential intervention effects were tested within the spatio-spectral clusters of interest (COIs) identified based on the time- and frequency-sensitive TFR analysis for the MEG data at 0 months. The COIs defined the time-windows, frequency bands and sensors of interest for the two cognitive processes (working memory, inhibition). In each of the COIs, we contrasted the TFRs across two conditions/stages (i.e., before *vs* after encoder to extract activation reflecting working memory and easy *vs* difficult distractor to extract activation reflecting inhibition) separately at the two other MEG measurement sessions (6 and 12 months). Subsequently, we extracted one power value per subject by averaging the resulting difference in TFRs in the COIs across sensors within the COIs and either across time (for COIs from time-sensitive TFR analysis) or across frequency band (for COIs from frequency-sensitive TFR analysis). This yielded, for each COI, a vector of single power values for each participant both at 6 months and 12 months after the start of the training program.

A similar subtraction and averaging procedures were performed for the MEG data computed at 0 months. Prior to testing for any training effects, we normalized the individual power values at each COI at 6 and 12 months by subtracting this value from the corresponding power value at 0 months (relative-difference power values). MEG data at 0 months was expected to represent the initial level of neurocognitive functions of the participants. To determine any differences in task-dependent MEG signal modulations between the two training groups, we compared these relative-difference power values between the PT and PTCT groups using the non-parametric equivalent of an independent samples *t*-test (Mann Whitney *U* test; using IBM SPSS Statistics for Mac, version 26 (IBM - Corp., Armonk, N.Y., USA).

3. Results

The compliance of the subjects to follow the walking and resistance training did not show statistically significant differences between the two groups ($p = 0.396$ and $p = 0.062$ for the walking and resistance exercise compliance, respectively).

3.1. *Effects of time (0, 6 or 12 months) and training type on behavioral data*

The Linear Mixed Effects model analysis on the behavioral data (Stroop difference, Trail Making Test A, Trail Making Test B and Trail Making Test A-B) consisting of measurement session, training type (i.e. PT and PTCT groups) and their interaction as Fixed Effects revealed that Stroop difference demonstrated statistically significant effects of measurement session ($F = 8.076$; $p = 0.0009$) and training type ($F = 5.749$; $p = 0.024$), whereas the interaction between measurement session and training type was not significant ($p = 0.56$). The other measures (TMTA, TMTB, TMTB-A) did not show any tendencies for measurement session or training type effects ($p > 0.33$ for all comparisons). The additional time needed to complete the more demanding Stroop dual-task condition was smaller in PTCT group than in the PT group, thus suggesting better executive control skills for the PTCT group (Fig. 3). Based on the non-parametric 2-sample statistical test, this difference between the two intervention groups reached statistical significance 6 months ($p < 0.05$) as well as 12 months ($p < 0.05$) after the beginning of the program (Fig. 3), whereas no differences were observed at 0 months ($p = 0.206$).

For CERAD that was collected only at two measurement sessions (0 and 12 months), no statistically significant effects of measurement session or training type were observed using the Wilcoxon Signed Rank test and Mann U-Whitney *U* test ($p = 0.27$ for time, and $p = 0.98$ and $p = 0.79$ for training type at the two time points).

Table 2 shows the behavioral data (mean ± SD) for the two groups at the different time-points.Table 3..

3.2. *Neural processing underlying encoding/maintenance and distractor inhibition*

At 0 months the time-sensitive and frequency-sensitive statistical comparisons between TFRs of different conditions revealed neural modulations reflecting the cognitive processes related to the encoding and maintenance of an image in memory and the inhibition of an easy *vs* a difficult distractor image. Overall, the outcome of both analysis pipelines emphasized frequencies below 45 Hz, and specifically the theta, alpha, beta and low gamma frequency bands (Fig. 4). The *encoding and maintenance of an image in memory* was associated with modulations in neural activity in MEG sensors mostly located at the vertex and covering several frequency bands spanning the entire 1–45 Hz frequency range, including the low gamma band frequency range (35–45 Hz) (Fig. 4A). On the other hand, *distractor inhibition* emphasized clearly more posterior cortical regions bilaterally, with the effect being delimited in the 1– 30 Hz frequency range (Fig. 4B).

The time-sensitive and frequency-sensitive TFR analyses seemed to probe different aspects of the studied cognitive processes. With regards to encoding and maintenance of an image in memory, the time-sensitive TFR analysis highlighted the 8–13 Hz and 35–45 Hz frequency bands, with a spatial emphasis on sensors located over the vertex (Fig. 4A, top). The frequency-sensitive TFR analysis revealed modulations in MEG signal power that were less spatially and spectrally specific: they

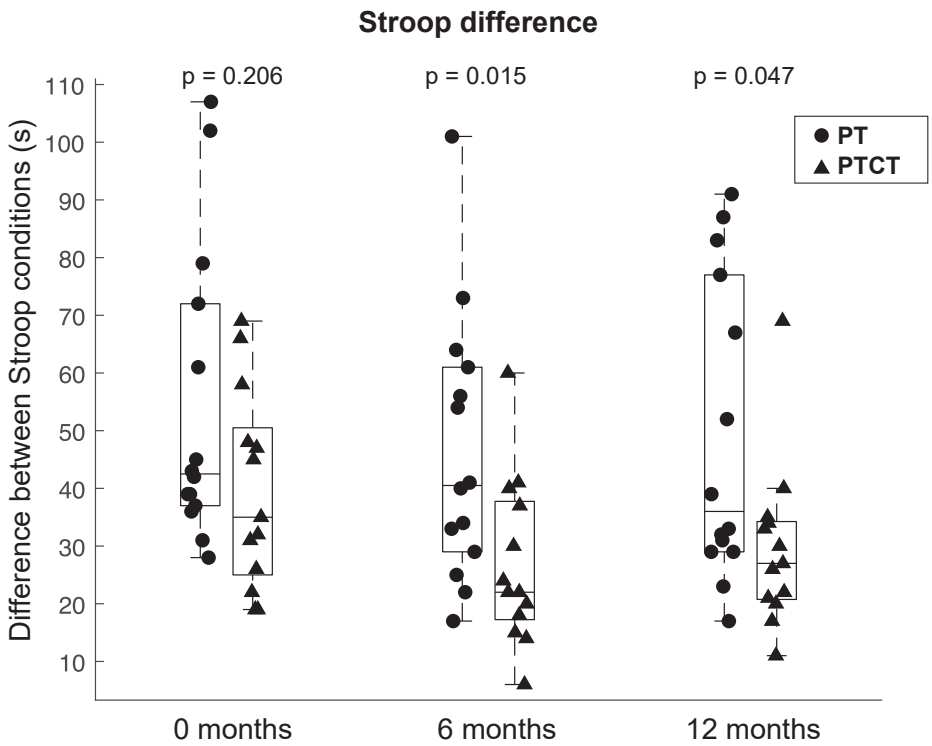

Fig. 3. Stroop difference across participants (y-axis, in seconds) plotted for each measurement session (x-axis) for the two intervention groups separately (PT, dots; PTCT, triangles). P-values for the statistical comparisons between the two intervention groups are overlaid on each plot. Statistically significant differences between the PT and PTCT groups occur 6 months ($p < 0.05$) and 12 months ($p < 0.05$) from the start of the intervention. The box plots show the 25 %, 50 % and 75 % quartiles of the data with the whiskers representing the minimum and maximum individual values falling within a set range (1.5 times the difference between the 75 % and 25 % quartile) of the 25 % and 75 % quartiles, respectively.

Table 2
Total CERAD score, TMTA, TMTB, TMTB-A and Stroop difference per intervention group (PT and PTCT) and measurement session (0, 6 and 12 months).

	CERAD		TMTA		TMTB		TMTB-A		Stroop	
	PT	*PTCT*	*PT*	*PTCT*	*PT*	*PTCT*	*PT*	*PTCT*	*PT*	*PTCT*
0 mo	83 ± 5	83 ± 6	39 ± 10	38 ± 10	105 ± 22	100 ± 35	66 ± 16	62 ± 28	54 ± 26	40 ± 17
6 mo			38 ± 11	39 ± 11	110 ± 29	100 ± 39	73 ± 25	60 ± 35	46 ± 23	29 ± 14
12mo	84 ± 5	84 ± 7	39 ± 15	35 ± 7	108 ± 37	99 ± 37	69 ± 34	65 ± 33	49 ± 26	30 ± 14

Table 3
P-values for the statistical analysis examining intervention effects on COIs defined through frequency-based and time-based TFR analysis. P-values that are significant or close to significance (alpha = 0.05) are shown in bold.

Before vs after encoding image					
Averaged across frequency			***Averaged across time***		
	Post1	*Post2*		*Post1*	*Post2*
35–45 Hz (0 – 450 ms)	0,536	0,138	1–4 Hz	0,527	0,222
35–45 Hz (600 – 1000 ms)	0,727	0,796	6–30 Hz	0,347	0,536
8–13 Hz (810–1000 ms)	0,893	0,192	8–13 Hz	0,403	0,267
			15–25 Hz	0,82	0,572
After easy vs difficult distractor					
Averaged across frequency			***Averaged across time***		
	Post1	*Post2*		*Post1*	*Post2*
1–30 Hz	0,053	0,625	1–25 Hz	0,25	0,896
			8–13 Hz	0,434	0,371
			15–25 Hz	**0,056**	**0,005**

spanned several frequency bands (1–4 Hz, 6–30 Hz, 8–13 Hz, 15–25 Hz) and encompassed a wide array of sensors across the MEG helmet (Fig. 4A, bottom). With regards to *the inhibition of an easy vs a difficult distractor* the time-sensitive TFR analysis revealed modulations in signal power in the 1–30 Hz frequency band in posterior MEG sensors (Fig. 4B, top). The frequency-sensitive TFR analysis revealed three different clusters, also posteriorly distributed in parieto-occipital areas in three different frequency bands (1–25 Hz, 8–13 Hz, 15–25 Hz; Fig. 4B, bottom).

3.3. *Effect of type of training on MEG data*

The power values from all the COIs depicted in Fig. 4 were tested for differences between the PT and PTCT group to examine the potential additive influence of cognitive training on the neural correlates of cognitive function. The effect of the intervention was found in only one COI that was associated with inhibition of an easy *vs* a difficult distractor. Specifically, we found a larger increase in MEG signal power in the frequency band (15 – 25 Hz) in posterior MEG sensors bilaterally but with an emphasis in the right hemisphere (Fig. 5A) for the PT intervention group (Fig. 5B). This effect was found both at 6 months ($p = 0.056$; marginally significant) and 12 months ($p < 0.01$) after the start of the intervention (Fig. 5B). None of the other COIs depicted in Fig. 4 demonstrated any training effects; the p-values for these non-significant effects are summarized in Table 2.

4. Discussion

We investigated whether adding cognitive training with 12 months multicomponent physical exercise program has additional benefits on executive functions and their neural underpinnings in older community dwelling men and women who did not meet physical activity recommendations. The present findings indicate that the addition of cognitive training has a quantifiable beneficial effect on executive function. In accordance with our hypothesis, we observed this effect on both the behavioral and the neural level. Behaviorally, the addition of cognitive training was manifested as significantly improved performance in the

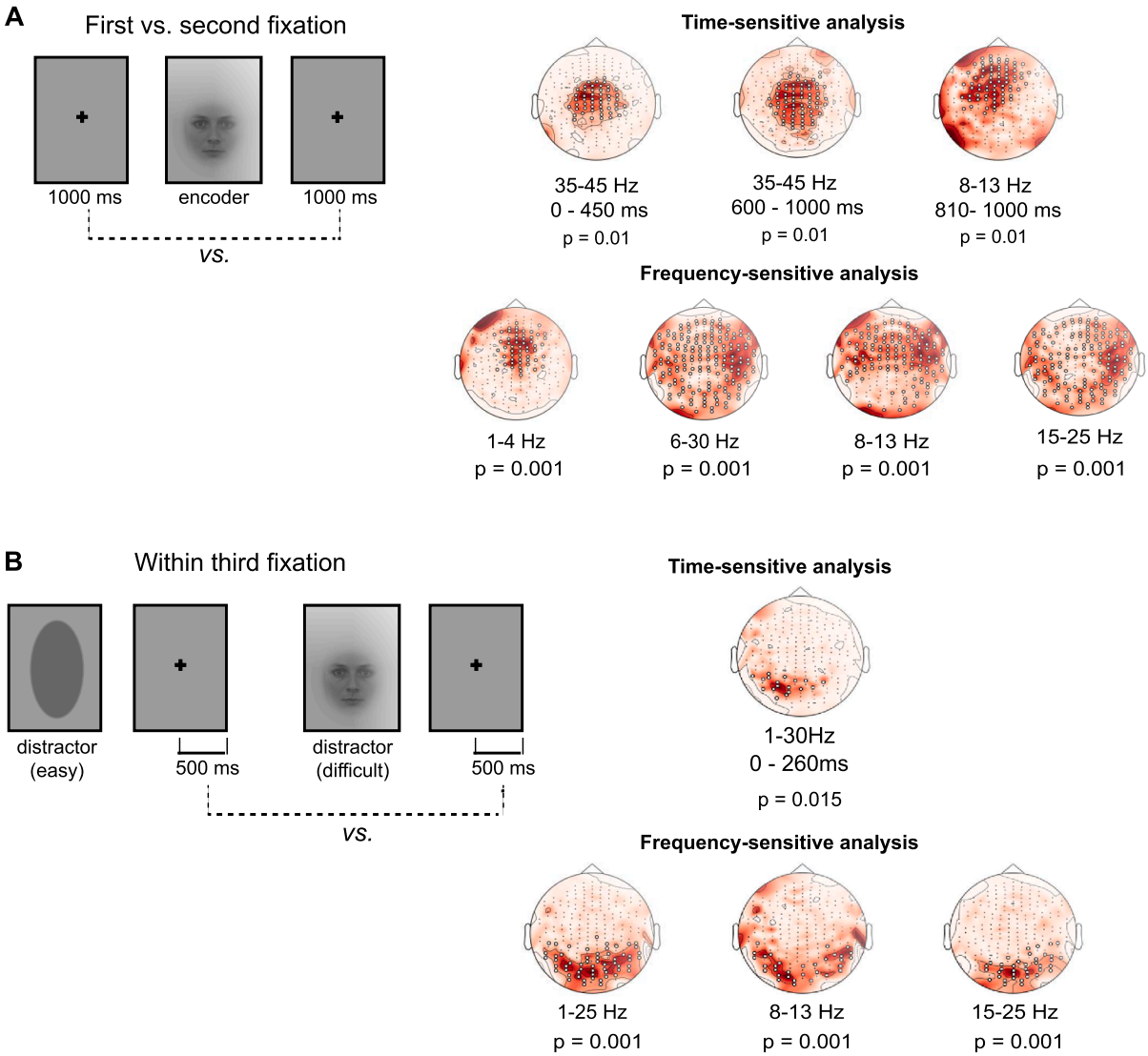

Fig. 4. The neural correlates of the cognitive processes of encoding, maintenance and inhibitory control. ***A.***, *COIs* demonstrating modulations in activity for encoding and maintenance of a visual image revealed by contrasting TFRs before *vs* after the encoder image (top: *time-sensitive* analysis; bottom: *frequency-sensitive* analysis) ***B.***, COIs demonstrating modulations in related to inhibitory control revealed by contrasting TFRs within the third fixation (after an easy *vs* a difficult distractor) (top: *time-sensitive* analysis; bottom: *frequency-sensitive* analysis). P-values are shown underneath each COI. Statistically significant sensors are represented as white circles. Time-windows in which the significant effects are observed are reported for *time-sensitive.* All the COIs depicted here were statistically tested for intervention effects.

Stroop task. The additional time needed to complete the more demanding Color Stroop condition, that places greater demands on inhibitory control, was smaller for individuals in the PTCT than those in PT group. This finding therefore indicates improved executive functions. At the neural level, we observed decreased MEG signal power for the PTCT group in the beta frequency band (15–25 Hz), as compared with the signal power in PT group, associated with inhibition of irrelevant sensory information. These findings argue towards the added benefit of cognitive training integrated to a physical exercise program, instead of implementing an intervention that consists of physical training alone.

The improvements in executive skills were manifested through the Stroop difference. The most demanding condition of the Stroop test (Condition 3) measures the ability to inhibit processing of usually automatically attended, yet task-irrelevant features of a given stimulus. It thus involves shifting of one's attention on the processing of stimulus features that are behaviorally less salient (Stroop, 1935). Condition 3 of the Stroop test is inherently more difficult than Condition 2, which involves automatic sensory processing. This difficulty in inhibiting automatic sensory processing in Condition 3 is called the Stroop effect (Stroop, 1935). The present findings suggest that, after prolonged training period, individuals in the PTCT group demonstrated a smaller Stroop effect, and thus were more capable in inhibiting cognitive interference than individuals in the PT group. This effect is likely to be caused by the fact that the PTCT group followed a cognitive training program that was specifically designed in improving executive control, and it included tasks related to color interference and inhibitory control that are probed by the Stroop test itself. It is therefore not surprising that individuals belonging to the PTCT group improved more in their performance, but it brings important scientific evidence supporting integration of cognitive training in the increasingly popular physical exercise programs that are intended to improve cognitive functions in elderly. Notably, the cognitive training included cognitive interference tasks that are not identical to Stroop but require similar cognitive elements of inhibitory control. Since cognitive intervention effects are shown to be very hard to generalize beyond the specific trained task, the generalizability of the effect across tasks in the domain of inhibitory control gives some support also to the possible benefit of physical exercise in making the brain more prone to change in response to cognitive training. This hypothesis would, however, need to be tested in separate experiment, where also the additional benefit of physical exercise on

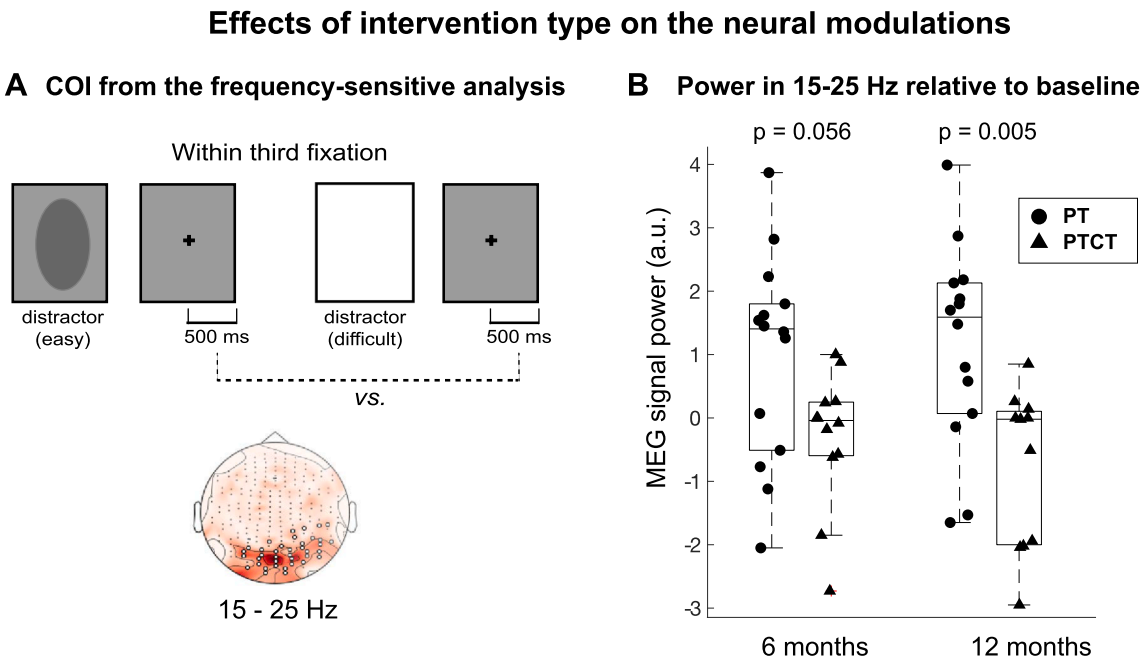

Fig. 5. Statistically significant effects of the intervention in A) a COI in the 15–25 Hz frequency range representing neural modulations for inhibiting an easy *vs* a difficult distractor. B) MEG signal power in the COI across participants (y-axis; a.u.) plotted for each of the three MEG measurement sessions (0 months, 6 months, 12 months). Statistically significant differences occur 6 months ($p = 0.056$) and 12 months ($p < 0.01$) from the start of the intervention. The box plots show the 25 %, 50 % and 75 % quartiles of the data with the whiskers representing the minimum and maximum individual values falling within a set range (1.5 times the difference between the 75 % and 25 % quartile) of the 25 % and 75 % quartiles, respectively.

cognitive training would be approached.

On the neural level, we discovered that the modulation in MEG signal power in the beta frequency band (15–25 Hz), that was associated with inhibitory control, significantly changed in response to added cognitive training element (PTCT *vs* PT group). This effect may have several possible origins. It has been suggested that there is a positive relationship between the amplitude of low-frequency oscillations (in the theta, alpha and beta frequency bands) and cognitive load, as well as task difficulty (e.g., Jensen et al., 2002). It may thus be proposed that processing of same-category interference as an encoding image, that is, a difficult distractor depicting a face similar in appearance to the encoding image is less taxing for individuals that underwent a physical activity intervention with the addition of cognitive training. The efficacy of this combined training might be linked to the fact that physical training and cognitive training exert a complementary modulatory influence on the neural basis of memory and cognitive function. However, the possibility, that cognitive training only would be enough to show the demonstrated effects cannot be ruled out by our experimental paradigm, and further studies are needed to bring additional evidence of the complementary benefit.

Another possibility is related to evidence that aging is associated with increases in neural activity as a compensatory effect (Flöel et al., 2010; Houde et al., 2000; Smith et al., 2009). Therefore, the increased modulations in beta power observed for the PT group might suggest that for the PTCT group, the aging-related, compensatory increases in neural activity in this frequency range have been delayed through the addition of the cognitive intervention. Intriguingly, the effects of additional cognitive training at both the neural and the behavioral levels are associated with inhibitory control. It could thus be suggested that the intervention effects on neural activation during inhibitory processing underlie the improvements in the behaviorally measured Stroop difference for the PTCT group. However, support for this interpretation would benefit from the explicit quantification of the relationship between these two associated intervention effects, requiring larger sample sizes to be reliably studied.

In our study, time- and frequency-sensitive TFR analysis revealed task-related modulations in MEG signal power within the 1–30 Hz, 1–25 Hz, 8–13 Hz, and 15–25 Hz frequency bands. Only the last of these spatiospectral effects demonstrated sensitivity to the additional cognitive training. The reason for this may be that the other clusters could capture modulations in MEG signal power that do not directly reflect inhibitory control. Specifically, we suggest that the observed spatiospectral modulations in the alpha band (8–13 Hz) are related to memory processes that play an important supportive role in inhibitory control. Indeed, the contribution of modulations in alpha-band power in memory functions has been widely documented (Jensen et al., 2002; Palva et al., 2010; Payne & Kounios, 2009). Furthermore, modulations in electrophysiological signal power at 1–30 Hz might be related to general task engagement, and therefore reflect domain-general mechanisms that are associated with general features of the task, such as, for example, stimulus characteristics, task difficulty, attention, and task switching (Perianez et al., 2004). In contrast to these auxiliary or general mechanisms, the spatiospectral effects limited more narrowly to the 15–25 Hz frequency band have been found to purely reflect inhibitory control and to be quite specific to the suppression of irrelevant information (Hwang et al., 2014; Niccolai et al., 2016). Notably, the cognitive training contained tasks that were related to color interference and inhibitory control and that directly link to the Stroop test. We thus suggest that the effect at the neural level due to additional cognitive training reflects modulations in neural activity associated specifically with inhibitory control, and most likely results from the additional benefit of the domain-specific training on inhibitory control, as it is encountered in the context of the Stroop test.

Therefore, we observed statistically significant neural modulations for the PTCT compared to the PT group uniquely in the 15–25 Hz frequency band that is associated with inhibitory processes and thus executive control. Even though modulations in MEG signal power representing encoding of a stimulus in memory spanned a wide array of frequency ranges and demonstrated different spatial patterns, none of these COIs demonstrated intervention effects by cognitive training. One interpretation is that modulations in neural activity associated with encoding and maintenance of a stimulus in memory are not sensitive to

the addition of cognitive training. However, the fact that we did not observe any intervention effect on the neural or behavioral correlates of working memory does not necessarily imply that such effects are absent. It has been shown earlier that a combined intervention is more efficient than a single-modality intervention in increasing behavioral measures of working memory (Langdon & Corbett, 2012; Shatil, 2013). In addition, within the scope of a combined intervention, the special emphasis on resistance training in the physical exercise component is paramount in the improvement of working memory capacity (Aquino et al., 2016). Similarly, by selectively including a different set of complex mental tasks in the cognitive training intervention one could further tap into working memory processes, especially given the notable domain-specificity of cognitive training. It is important to acknowledge this multiplicity in the design for combined interventions as it allows one to target specific cognitive processes, but could also introduce an element of uncertainty when interpreting the findings (for descriptions of the various approaches employed in designing physical exercise and cognitive training interventions see e.g., (Joubert & Chainay, 2018).

In line with this view, it is noteworthy that, in contrast to the present study and previous evidence (Zhu et al., 2016), a number of studies question the superiority of combined interventions over interventions that consist of either physical exercise or cognitive training alone (e.g., Desjardins-Crepeau et al., 2016; Joubert & Chainay, 2018; Plummer-D'Amato et al., 2012). While it is most straightforward to consider the beneficial effect of cognitive training as being additive with respect to the effect of physical exercise, in essence, one must instead evaluate this effect as a synergy between these two types of training (Lauenroth et al., 2016; Sipilä et al., 2018). Therefore, beyond a mere addition, any supplementary benefit of combined interventions originates from an interaction between the two intervention modalities. Therefore, any existing discrepancies in experimental evidence could be explained through the exact components and constituent structure of both types of trainings, as they play a critical role on the overall effect of an intervention.

Therefore, one methodological consideration of the present study is the fact that the findings are directly dependent on the specific structure of the intervention protocol: The particular configuration of both training types and the resulting interrelations between its constituent elements may, for example, explain the lack of intervention effects in other similar studies, and also shape the observations of the current study. However, the general consensus seems to be that the main criteria for the efficiency of an intervention, either physical or cognitive in nature, is that they should impose a sufficient physical and mental load in order to induce any improvements in cognitive functions (Lauenroth et al., 2016). In the present study, the difficulty of the cognitive training was increased for the entire duration of the intervention period; in addition, the tasks alternated between sessions in order to reduce learning effects and maintain participants' engagement. Also, the physical exercise program was designed to maintain its capacity to challenge the participants, while simultaneously minimizing the possibility of overtraining and fatigue. A multicomponent physical exercise protocol also accounted for any possible adaption effects and enhancements in physiological capacities. With this variable and individually adjusting training protocol, the present study was able to demonstrate significant benefits in the neural and behavioral indications of cognitive control, brought about by physical exercise program but only when additional cognitive training was implemented.

It will be important to achieve more detailed understanding of the specific contribution of different elements, both exercise -related and in cognitive training, by more systematically manipulating different elements. The anticipated hypothesis we would like to propose is to consider physical exercise as means to increase the level of plasticity in the neural networks, upon which cognitive training is needed to achieve behaviorally meaningful outcomes. As regards the behavioral effects within our study, it is noteworthy that we observed an intervention effect only on the absolute Stroop difference (the actual Stroop difference measured 6 months and 12 months after the start of the intervention) rather than the relative Stroop difference that reflects the change in performance 6 and 12 months after the start of the training program from the baseline. In contrast to absolute differences, no statistically significant differences in relative Stroop difference were revealed between the two groups. Since the two groups are matched at 0 months (no statistically significant difference were revealed between the two groups), we suggest that this non-significant effect of the intervention for relative Stroop difference is most likely attributed to small sample size that could mask such an effect. Moreover, as Stroop difference was used to quantify executive functioning, it is possible that the observed behavioral effects are mainly due to changes in processing speed rather than executive functioning as such. A better quantification of executive functioning could be obtained by using the interference score (Scarpina & Tagini, 2017). However, as in the Stroop test that was used in the present study the number of items named correctly in 45 s were not recorded, it was not possible to apply the interference score within this study.

Another methodological consideration is related to the absence of a control group, which is also the weakness of other similar studies (Lauenroth et al., 2016). While the present approach can point the neural and behavioral benefits of combined training, we cannot provide more comprehensive picture of the different training types, and specifically of the independent effects of the cognitive training. In accordance with (Lauenroth et al., 2016) we acknowledge the necessity for standardized experimental protocol on which future studies will be based upon: we propose that this will be a more fruitful approach in reaching a general consensus on the potential benefit of combined interventions. Ideally, these protocols could account for the fact that the potential for synergistic effects of combining exercise and cognitive training may depend on individual differences in the availability of neurotrophic factors induced by exercise. It should also be noted that as the amount of physical training was equal for the two groups and no control/sham cognitive component was used for the PT group, the PTCT group received overall more hours of training. This difference could in part explain the observed differences between the two subject groups.

5. Conclusions

Our findings revealed the brain dynamics underlying improvements in executive functions in elderly brought about by physical exercise with additional cognitive training. They also highlight that adding the domain-specific cognitive skill training is associated with distinct behavioral and brain activation patterns. In a broader context, the present findings argue towards the importance of applying multimodal, cross-domain interventions for improving executive functions and memory in elderly individuals (Kraft, 2012). Theoretically, our results call for frameworks, that combine the concepts and propositions from theories of physical activity triggered brain changes, multicomponent interventions and neurocognitive decline in elderly. Future studies, ideally conforming to a standardized experimental paradigm that also involves a control group, are required in order to further elucidate the potential of combined interventions to modulate both cortical structure and function in the elderly.

Data and code availability statement

The MEG data cannot be made openly available, according to the ethical permission and national privacy regulations at the time of the study. Analysis methods used in the study are based on openly available software packages for MEG analysis, as described in the Materials and Methods.

Declaration of Competing Interest

The authors declare that they have no known competing financial interests or personal relationships that could have appeared to influence the work reported in this paper.

Data availability

Data will be made available on request.

Acknowledgments

We like to thank Anna Tirkkonen (MSc) for coordinating the PASS-WORD -project and Emmi Matikainen (PT, MSc), Noora Sartela (MSc), Hanna Antilainen (PT, MSc) and Elina Vettenterä (PT, MSc) for drafting and designing the physical training intervention. We also like to thank Sini Hentilä, Tiina Autio, Tiina Mikkonen and Arttu Perello for assisting in MEG data acquisition and Tony Qwillbard for programming the iPASS software. Declarations of interest: none.

Funding Information

The Academy of Finland has financially supported this study (Grant numbers 296843, 311877).

References

Adcock, M., Fankhauser, M., Post, J., Lutz, K., Zizlsperger, L., Luft, A. R., Guimarães, V., Schättin, A., & de Bruin, E. D. (2020). Effects of an In-home Multicomponent Exergame Training on Physical Functions, Cognition, and Brain Volume of Older Adults: A Randomized Controlled Trial. *Frontiers in Medicine, 6*, 321. https://doi.org/10.3389/FMED.2019.00321/BIBTEX

Ahlskog, J. E., Geda, Y. E., Graff-Radford, N. R., & Petersen, R. C. (2011). Physical exercise as a preventive or disease-modifying treatment of dementia and brain aging. *Mayo Clinic Proceedings, 86*(9), 876–884. https://doi.org/10.4065/mcp.2011.0252

Aine, C. J., Sanfratello, L., Adair, J. C., Knoefel, J. E., Caprihan, A., & Stephen, J. M. (2011). Development and decline of memory functions in normal, pathological and healthy successful aging. *Brain Topogr, 24*(3–4), 323–339. https://doi.org/10.1007/s10548-011-0178-x

Aquino, G., Iuliano, E., di Cagno, A., Vardaro, A., Fiorilli, G., Moffa, S., di Costanzo, A., de Simone, G., & Calcagno, G. (2016). Effects of combined training vs aerobic training on cognitive functions in COPD: A randomized controlled trial. *Int J Chron Obstruct Pulmon Dis, 11*, 711–718. https://doi.org/10.2147/COPD.S96663 copd-11-711 [pii].

Bäckman, L., Jones, S., Berger, A. K., Laukka, E. J., & Small, B. J. (2005). Cognitive impairment in preclinical Alzheimer's disease: A meta-analysis. *Neuropsychology, 19*(4), 520–531. https://doi.org/10.1037/0894-4105.19.4.520

Bäckman, L., Lindenberger, U., Li, S. C., & Nyberg, L. (2010). Linking cognitive aging to alterations in dopamine neurotransmitter functioning: Recent data and future avenues. *Neurosci Biobehav Rev, 34*(5), 670–677 [pii] 10.1016/j.neubiorev.2009.12.008 https://doi.org/S0149-7634(09)00205-X.

Bamidis, P. D., Vivas, A. B., Styliadis, C., Frantzidis, C., Klados, M., Schlee, W., Siountas, A., & Papageorgiou, S. G. (2014). A review of physical and cognitive interventions in aging. *Neurosci Biobehav Rev, 44*, 206–220 [pii] 10.1016/j.neubiorev.2014.03.019 https://doi.org/S0149-7634(14)00075-X.

Barnes, D. E., Yaffe, K., Belfor, N., Jagust, W. J., DeCarli, C., Reed, B. R., & Kramer, J. H. (2009). Computer-based cognitive training for mild cognitive impairment: Results from a pilot randomized, controlled trial. *Alzheimer Dis Assoc Disord, 23*(3), 205–210. https://doi.org/10.1097/WAD.0b013e31819c6137 00002093-200907000-00005 [pii]

Berendse, H. W., Verbunt, J. P., Scheltens, P., van Dijk, B. W., & Jonkman, E. J. (2000). Magnetoencephalographic analysis of cortical activity in Alzheimer's disease: A pilot study. *Clin Neurophysiol, 111*(4), 604–612 [pii] 10.1016/s1388-2457(99)00309-0 https://doi.org/S1388-2457(99)00309-0.

Bherer, L. (2015). Cognitive plasticity in older adults: Effects of cognitive training and physical exercise. *Ann N Y Acad Sci, 1337*, 1–6. https://doi.org/10.1111/nyas.12682

Bherer, L., Erickson, K. I., & Liu-Ambrose, T. (2013). A review of the effects of physical activity and exercise on cognitive and brain functions in older adults. *J Aging Res, 2013*, Article 657508. https://doi.org/10.1155/2013/657508

Bowie, C. R., & Harvey, P. D. (2006). Administration and interpretation of the Trail Making Test. *Nat Protoc, 1*(5), 2277–2281 [pii] 10.1038/nprot.2006.390 https://doi.org/nprot.2006.390.

Brennan, M., Welsh, M. C., & Fisher, C. B. (1997). Aging and executive function skills: An examination of a community-dwelling older adult population. *Percept Mot Skills, 84*(3 Pt 2), 1187–1197. https://doi.org/10.2466/pms.1997.84.3c.1187

Chandler, M. J., Lacritz, L. H., Hynan, L. S., Barnard, H. D., Allen, G., Deschner, M., Weiner, M. F., & Cullum, C. M. (2005). A total score for the CERAD neuropsychological battery. *Neurology, 65*(1), 102–106. https://doi.org/10.1212/01.wnl.0000167607.63000.38

Collette, F., Germain, S., Hogge, M., & der Linden, M. (2009). Inhibitory control of memory in normal ageing: Dissociation between impaired intentional and preserved unintentional processes. *Memory, 17*(1), 104–122 [pii] 10.1080/09658210802574146 https://doi.org/907093948.

Cummins, T. D., & Finnigan, S. (2007). Theta power is reduced in healthy cognitive aging. *Int J Psychophysiol, 66*(1), 10–17 [pii] 10.1016/j.ijpsycho.2007.05.008 [doi] https://doi.org/S0167-8760(07)00119-5.

Dahlin, E., Neely, A. S., Larsson, A., Backman, L., & Nyberg, L. (2008). Transfer of learning after updating training mediated by the striatum. *Science, 320*(5882), 1510–1512 [pii] 10.1126/science.1155466 https://doi.org/320/5882/1510.

Desjardins-Crepeau, L., Berryman, N., Fraser, S. A., Vu, T. T., Kergoat, M. J., Li, K. Z., Bosquet, L., & Bherer, L. (2016). Effects of combined physical and cognitive training on fitness and neuropsychological outcomes in healthy older adults. *Clin Interv Aging, 11*, 1287–1299. https://doi.org/10.2147/cia.s115711

Erickson, K. I., Hillman, C. H., & Kramer, A. F. (2015). Physical activity, brain, and cognition. *Current Opinion in Behavioral Sciences, 4*, 27–32. https://doi.org/10.1016/j.cobeha.2015.01.005.

Finnigan, S., & Robertson, I. H. (2011). Resting EEG theta power correlates with cognitive performance in healthy older adults. *Psychophysiology, 48*(8), 1083–1087. https://doi.org/10.1111/j.1469-8986.2010.01173.x

Flöel, A., Ruscheweyh, R., Krüger, K., Willemer, C., Winter, B., Völker, K., Lohmann, H., Zitzmann, M., Mooren, F., Breitenstein, C., & Knecht, S. (2010). Physical activity and memory functions: Are neurotrophins and cerebral gray matter volume the missing link? *Neuroimage, 49*(3), 2756–2763 [pii] 10.1016/j.neuroimage.2009.10.043 https://doi.org/S1053-8119(09)01114-8.

Goeleven, E., de Raedt, R., Leyman, L., & Verschuere, B. (2008). The Karolinska Directed Emotional Faces: A validation study. *Cognition and Emotion, 22*(6), 1094–1118. https://doi.org/10.1080/02699930701626582

Graf, P., Uttl, B., & Tuokko, H. (1995). Color- and picture-word stroop tests: Performance changes in old age. *Journal of Clinical and Experimental Neuropsychology, 17*(3), 390–415. https://doi.org/10.1080/01688639508405132

Gramfort, A., Luessi, M., Larson, E., Engemann, D. A., Strohmeier, D., Brodbeck, C., Goj, R., Jas, M., Brooks, T., Parkkonen, L., & Hamalainen, M. (2013). MEG and EEG data analysis with MNE-Python. *Front Neurosci, 7*, 267. https://doi.org/10.3389/fnins.2013.00267

Hedden, T., & Gabrieli, J. D. E. (2004). Insights into the ageing mind: A view from cognitive neuroscience. *Nature Reviews Neuroscience, 5*(2), 87–96. https://doi.org/10.1038/nrn1323

Helenius, P., Parviainen, T., Paetau, R., & Salmelin, R. (2009). Neural processing of spoken words in specific language impairment and dyslexia. *Brain, 132*(7), 1918–1927. https://doi.org/10.1093/BRAIN/AWP134

Hernández, D., Heinilä, E., Muotka, J., Ruotsalainen, I., Lapinkero, H. M., Syväoja, H., Tammelin, T. H., & Parviainen, T. (2021). Physical activity and aerobic fitness show different associations with brain processes underlying anticipatory selective visuospatial attention in adolescents. *Brain Research, 1761*. https://doi.org/10.1016/J.BRAINRES.2021.147392

Honkanen, R., Rouhinen, S., Wang, S. H., Palva, J. M., & Palva, S. (2015). Gamma Oscillations Underlie the Maintenance of Feature-Specific Information and the Contents of Visual Working Memory. *Cereb Cortex, 25*(10), 3788–3801 [pii] 10.1093/cercor/bhu263 https://doi.org/bhu263.

Hotting, K., & Roder, B. (2013). Beneficial effects of physical exercise on neuroplasticity and cognition. *Neurosci Biobehav Rev, 37*(9 Pt B), 2243–2257 [pii] 10.1016/j.neubiorev.2013.04.005 https://doi.org/S0149-7634(13)00101-2.

Houde, O., Zago, L., Mellet, E., Moutier, S., Pineau, A., Mazoyer, B., & Tzourio-Mazoyer, N. (2000). Shifting from the perceptual brain to the logical brain: The neural impact of cognitive inhibition training. *J Cogn Neurosci, 12*(5), 721–728. https://doi.org/10.1162/089892900562525

Hultén, A., Karvonen, L., Laine, M., & Salmelin, R. (2014). Producing speech with a newly learned morphosyntax and vocabulary: An magnetoencephalography study. *Journal of Cognitive Neuroscience, 26*(8), 1721–1735. https://doi.org/10.1162/JOCN_A_00558

Hulten, A., Vihla, M., Laine, M., & Salmelin, R. (2009). Accessing newly learned names and meanings in the native language. *Hum Brain Mapp, 30*(3), 976–989. https://doi.org/10.1002/hbm.20561

Hwang, K., Ghuman, A. S., Manoach, D. S., Jones, S. R., & Luna, B. (2014). Cortical neurodynamics of inhibitory control. *J Neurosci, 34*(29), 9551–9561. https://doi.org/34/29/9551 [pii] 10.1523/JNEUROSCI.4889-13.2014.

Hyvärinen, A. (1999). Fast and robust fixed-point algorithms for independent component analysis. *IEEE Trans Neural Netw, 10*(3), 626–634. https://doi.org/10.1109/72.761722

Jensen, O., Gelfand, J., Kounios, J., & Lisman, J. E. (2002). Oscillations in the alpha band (9–12 Hz) increase with memory load during retention in a short-term memory task. *Cerebral Cortex, 12*(8), 877–882.

Joubert, C., & Chainay, H. (2018). Aging brain: The effect of combined cognitive and physical training on cognition as compared to cognitive and physical training alone - a systematic review. *Clin Interv Aging, 13*, 1267–1301. https://doi.org/10.2147/CIA.S165399

Kivipelto, M., Solomon, A., Ahtiluoto, S., Ngandu, T., Lehtisalo, J., Antikainen, R., Backman, L., Hanninen, T., Jula, A., Laatikainen, T., Lindstrom, J., Mangialasche, F., Nissinen, A., Paajanen, T., Pajala, S., Peltonen, M., Rauramaa, R., Stigsdotter-Neely, A., Strandberg, T., … Soininen, H. (2013). The Finnish Geriatric Intervention Study to Prevent Cognitive Impairment and Disability (FINGER): study design and progress. *Alzheimers Dement, 9*(6), 657–665. https://doi.org/S1552-5260(12)02523-X [pii] 10.1016/j.jalz.2012.09.012.

Kraft, E. (2012). Cognitive function, physical activity, and aging: Possible biological links and implications for multimodal interventions. *Neuropsychol Dev Cogn B Aging Neuropsychol Cogn, 19*(1–2), 248–263. https://doi.org/10.1080/13825585.2011.645010

Kueider, A. M., Parisi, J. M., Gross, A. L., & Rebok, G. W. (2012). Computerized cognitive training with older adults: A systematic review. *PLoS One, 7*(7), e40588, 10.1371/journal.pone.0040588 PONE-D-12-10422 [pii].

Langdon, K. D., & Corbett, D. (2012). Improved working memory following novel combinations of physical and cognitive activity. *Neurorehabil Neural Repair*, *26*(5), 523–532. https://doi.org/1545968311425919 [pii] 10.1177/1545968311425919.

Lauenroth, A., Ioannidis, A. E., & Teichmann, B. (2016). Influence of combined physical and cognitive training on cognition: A systematic review. *BMC Geriatr, 16*, 141, 10.1186/s12877-016-0315-1 10.1186/s12877-016-0315-1 [pii].

Lundqvist, D., Flykt, A., & Öhman, A. (1998). The Karolinska directed emotional faces (KDEF). In *CD ROM from Department of Clinical Neuroscience*.

Lupien, S. J., de Leon, M., de Santi, S., Convit, A., Tarshish, C., Nair, N. P., Thakur, M., McEwen, B. S., Hauger, R. L., & Meaney, M. J. (1998). Cortisol levels during human aging predict hippocampal atrophy and memory deficits. *Nat Neurosci, 1*(1), 69–73. https://doi.org/10.1038/271

Melby-Lervåg, M., & Hulme, C. (2013). Is working memory training effective? A meta-analytic review. *Dev Psychol, 49*(2), 270–291 [pii] 10.1037/a0028228 [doi] https://doi.org/2012-12954-001.

Miyake, A., & Friedman, N. P. (2012). The Nature and Organization of Individual Differences in Executive Functions: Four General Conclusions. *Curr Dir Psychol Sci, 21*(1), 8–14. https://doi.org/10.1177/0963721411429458

Nelson, M. E., Rejeski, W. J., Blair, S. N., Duncan, P. W., Judge, J. O., King, A. C., Macera, C. A., & Castaneda-Sceppa, C. (2007). Physical activity and public health in older adults: Recommendation from the American College of Sports Medicine and the American Heart Association. *Medicine and Science in Sports and Exercise, 39*(8), 1435–1445. https://doi.org/10.1249/MSS.0B013E3180616AA2

Ngandu, T., Lehtisalo, J., Solomon, A., Levalahti, E., Ahtiluoto, S., Antikainen, R., Backman, L., Hanninen, T., Jula, A., Laatikainen, T., Lindstrom, J., Mangialasche, F., Paajanen, T., Pajala, S., Peltonen, M., Rauramaa, R., Stigsdotter-Neely, A., Strandberg, T., Tuomilehto, J., … Kivipelto, M. (2015). A 2 year multidomain intervention of diet, exercise, cognitive training, and vascular risk monitoring versus control to prevent cognitive decline in at-risk elderly people (FINGER): a randomised controlled trial. *Lancet*, *385*(9984), 2255–2263. https://doi.org/S0140-6736(15)60461-5 [pii] 10.1016/S0140-6736(15)60461-5.

Niccolai, V., van Dijk, H., Franzkowiak, S., Finis, J., Südmeyer, M., Jonas, M., Thomalla, G., Siebner, H. R., Müller-Vahl, K., Münchau, A., Schnitzler, A., & Biermann-Ruben, K. (2016). Increased beta rhythm as an indicator of inhibitory mechanisms in tourette syndrome. *Mov Disord, 31*(3), 384–392. https://doi.org/10.1002/mds.26454

Nishiguchi, S., Yamada, M., Tanigawa, T., Sekiyama, K., Kawagoe, T., Suzuki, M., Yoshikawa, S., Abe, N., Otsuka, Y., Nakai, R., Aoyama, T., & Tsuboyama, T. (2015). A 12-Week Physical and Cognitive Exercise Program Can Improve Cognitive Function and Neural Efficiency in Community-Dwelling Older Adults: A Randomized Controlled Trial. *Journal of the American Geriatrics Society, 63*(7), 1355–1363. https://doi.org/10.1111/JGS.13481

Pahor, M., Guralnik, J. M., Ambrosius, W. T., Blair, S., Bonds, D. E., Church, T. S., Espeland, M. A., Fielding, R. A., Gill, T. M., Groessl, E. J., King, A. C., Kritchevsky, S. B., Manini, T. M., McDermott, M. M., Miller, M. E., Newman, A. B., Rejeski, W. J., Sink, K. M., & Williamson, J. D. (2014). Effect of structured physical activity on prevention of major mobility disability in older adults: the LIFE study randomized clinical trial. *JAMA*, *311*(23), 2387–2396. https://doi.org/1875328 [pii] 10.1001/jama.2014.5616.

Palva, J. M., Monto, S., Kulashekhar, S., & Palva, S. (2010). Neuronal synchrony reveals working memory networks and predicts individual memory capacity. *Proc Natl Acad Sci U S A*, *107*(16), 7580–7585. https://doi.org/0913113107 [pii] 10.1073/pnas.0913113107.

Payne, L., & Kounios, J. (2009). Coherent oscillatory networks supporting short-term memory retention. *Brain Res*, *1247*, 126–132. https://doi.org/S0006-8993(08)02442-6 [pii] 10.1016/j.brainres.2008.09.095.

Penke, L., Munoz Maniega, S., Murray, C., Gow, A. J., Hernandez, M. C., Clayden, J. D., Starr, J. M., Wardlaw, J. M., Bastin, M. E., & Deary, I. J. (2010). A general factor of brain white matter integrity predicts information processing speed in healthy older people. *J Neurosci*, *30*(22), 7569–7574. https://doi.org/30/22/7569 [pii] 10.1523/JNEUROSCI.1553-10.2010.

Perianez, J. A., Maestu, F., Barcelo, F., Fernandez, A., Amo, C., & Ortiz Alonso, T. (2004). Spatiotemporal brain dynamics during preparatory set shifting: MEG evidence. *Neuroimage, 21*(2), 687–695. https://doi.org/10.1016/j.neuroimage.2003.10.008 S105381190300658X [pii].

Plummer-D'Amato, P., Cohen, Z., Daee, N. A., Lawson, S. E., Lizotte, M. R., & Padilla, A. (2012). Effects of once weekly dual-task training in older adults: A pilot randomized controlled trial. *Geriatr Gerontol Int, 12*(4), 622–629. https://doi.org/10.1111/j.1447-0594.2011.00825.x

Portegijs, E., Kallinen, M., Rantanen, T., Heinonen, A., Sihvonen, S., Alen, M., Kiviranta, I., & Sipilä, S. (2008). Effects of Resistance Training on Lower-Extremity Impairments in Older People With Hip Fracture. *Archives of Physical Medicine and Rehabilitation, 89*(9), 1667–1674. https://doi.org/10.1016/J.APMR.2008.01.026

Proskovec, A. L., Heinrichs-Graham, E., & Wilson, T. W. (2016). Aging modulates the oscillatory dynamics underlying successful working memory encoding and maintenance. *Hum Brain Mapp, 37*(6), 2348–2361. https://doi.org/10.1002/hbm.23178

Rahe, J., Petrelli, A., Kaesberg, S., Fink, G. R., Kessler, J., & Kalbe, E. (2015). Effects of cognitive training with additional physical activity compared to pure cognitive training in healthy older adults. *Clinical Interventions in Aging, 10*, 297–310. https://doi.org/10.2147/CIA.S74071

Rieker, J. A., Reales, J. M., Muiños, M., & Ballesteros, S. (2022). The Effects of Combined Cognitive-Physical Interventions on Cognitive Functioning in Healthy Older Adults: A Systematic Review and Multilevel Meta-Analysis. *Frontiers in Human Neuroscience, 16*, 112. https://doi.org/10.3389/FNHUM.2022.838968/BIBTEX

Rojas, D. C., Teale, P. D., Sheeder, J. L., & Reite, M. L. (2000). Neuromagnetic alpha suppression during an auditory sternberg task. Evidence for a serial, self-terminating search of short-term memory. *Brain Res Cogn Brain Res*, *10*(1–2), 85–89. https://doi.org/S0926-6410(00)00026-4 [pii] 10.1016/s0926-6410(00)00026-4.

Rottensteiner, M., Leskinen, T., Niskanen, E., Aaltonen, S., Mutikainen, S., Wikgren, J., Heikkilä, K., Kovanen, V., Kainulainen, H., Kaprio, J., Tarkka, I. M., & Kujala, U. M. (2015). Physical activity, fitness, glucose homeostasis, and brain morphology in twins. *Med Sci Sports Exerc, 47*(3), 509–518. https://doi.org/10.1249/MSS.0000000000000437

Roux, F., & Uhlhaas, P. J. (2014). Working memory and neural oscillations: Alpha-gamma versus theta-gamma codes for distinct WM information? *Trends Cogn Sci, 18*(1), 16–25 [pii] 10.1016/j.tics.2013.10.010 https://doi.org/S1364-6613(13)00231-3.

Scarpina, F., & Tagini, S. (2017). The Stroop Color and Word Test. *Frontiers in Psychology, 8*(APR). https://doi.org/10.3389/FPSYG.2017.00557

Shatil, E. (2013). Does combined cognitive training and physical activity training enhance cognitive abilities more than either alone? A four-condition randomized controlled trial among healthy older adults. *Front Aging Neurosci, 5*, 8. https://doi.org/10.3389/fnagi.2013.00008

Sipilä, S., Tirkkonen, A., Hänninen, T., Laukkanen, P., Alen, M., Fielding, R. A., Kivipelto, M., Kokko, K., Kulmala, J., Rantanen, T., Sihvonen, S. E., Sillanpää, E., Stigsdotter-Neely, A., & Törmäkangas, T. (2018). Promoting safe walking among older people: The effects of a physical and cognitive training intervention vs. physical training alone on mobility and falls among older community-dwelling men and women (the PASSWORD study): Design and methods of a randomize. *BMC Geriatrics, 18*(1), 215. https://doi.org/10.1186/s12877-018-0906-0

Sipilä, S., Tirkkonen, A., Savikangas, T., Hänninen, T., Laukkanen, P., Alen, M., Fielding, R. A., Kivipelto, M., Kulmala, J., Rantanen, T., Sihvonen, S. E., Sillanpää, E., Stigsdotter Neely, A., & Törmäkangas, T. (2021). Effects of physical and cognitive training on gait speed and cognition in older adults: A randomized controlled trial. *Scand J Med Sci Sports, 31*(7), 1518–1533. https://doi.org/10.1111/sms.13960

Smith, G. E., Housen, P., Yaffe, K., Ruff, R., Kennison, R. F., Mahncke, H. W., & Zelinski, E. M. (2009). A cognitive training program based on principles of brain plasticity: Results from the Improvement in Memory with Plasticity-based Adaptive Cognitive Training (IMPACT) study. *J Am Geriatr Soc, 57*(4), 594–603 [pii] 10.1111/j.1532-5415.2008.02167.x https://doi.org/JGS2167.

Stroop, J. R. (1935). Studies of interference in serial verbal reactions. *Journal of Experimental Psychology, 18*(6), 643–662. https://doi.org/10.1037/h0054651

Tamura, M., Nemoto, K., Kawaguchi, A., Kato, M., Arai, T., Kakuma, T., Mizukami, K., Matsuda, H., Soya, H., & Asada, T. (2015). Long-term mild-intensity exercise regimen preserves prefrontal cortical volume against aging. *Int J Geriatr Psychiatry, 30*(7), 686–694. https://doi.org/10.1002/gps.4205

Taulu, S., & Simola, J. (2006). Spatiotemporal signal space separation method for rejecting nearby interference in MEG measurements. *Physics in Medicine and Biology, 51*(7), 1759.

ten Brinke, L. F., Best, J. R., Chan, J. L. C., Ghag, C., Erickson, K. I., Handy, T. C., & Liu-Ambrose, T. (2020). The Effects of Computerized Cognitive Training With and Without Physical Exercise on Cognitive Function in Older Adults: An 8-Week Randomized Controlled Trial. *The Journals of Gerontology. Series A, Biological Sciences and Medical Sciences, 75*(4), 755–763. https://doi.org/10.1093/GERONA/GLZ115

Troyer, A. K., Graves, R. E., & Cullum, C. M. (1994). Executive functioning as a mediator of the relationship between age and episodic memory in healthy aging. *Aging, Neuropsychology, and Cognition, 1*(1), 45–53. https://doi.org/10.1080/09289919408251449

van der Zwan, J. E., de Vente, W., Huizink, A. C., Bogels, S. M., & de Bruin, E. I. (2015). Physical activity, mindfulness meditation, or heart rate variability biofeedback for stress reduction: A randomized controlled trial. *Appl Psychophysiol Biofeedback, 40*(4), 257–268, 10.1007/s10484-015-9293-x 10.1007/s10484-015-9293-x [pii].

van Dyck, D., Deconinck, N., Aeby, A., Baijot, S., Coquelet, N., Trotta, N., Rovai, A., Goldman, S., Urbain, C., Wens, V., & de Tiège, X. (2021). Resting-state functional brain connectivity is related to subsequent procedural learning skills in school-aged children. *NeuroImage, 240*, Article 118368. https://doi.org/10.1016/J.NEUROIMAGE.2021.118368

Vlahou, E. L., Thurm, F., Kolassa, I. T., & Schlee, W. (2014). Resting-state slow wave power, healthy aging and cognitive performance. *Sci Rep, 4*, 5101 [pii] 10.1038/srep05101 https://doi.org/srep05101.

Yu, R., Leung, G., & Woo, J. (2021). Randomized Controlled Trial on the Effects of a Combined Intervention of Computerized Cognitive Training Preceded by Physical Exercise for Improving Frailty Status and Cognitive Function in Older Adults. *International Journal of Environmental Research and Public Health, 18*(4), 1–14. https://doi.org/10.3390/IJERPH18041396

Zhu, X., Yin, S., Lang, M., He, R., & Li, J. (2016). The more the better? A meta-analysis on effects of combined cognitive and physical intervention on cognition in healthy older adults. *Ageing Research Reviews, 31*, 67–79. https://doi.org/10.1016/j.arr.2016.07.003.