JYX JYVÄSKYLÄN YLIOPISTO UNIVERSITY OF JYVÄSKYLÄ

This is a self-archived version of an original article. This version may differ from the original in pagination and typographic details.

Author(s): Kuznetsov, Nikolay V.; Lobachev, Mikhail Y.; Yuldashev, Marat V.; Yuldashev, Renat V.

Title: The Egan problem on the pull-in range of type 2 PLLs

Year: 2021

Version: Published version

Copyright: © 2020 the Authors

Rights: CC BY 4.0

Rights url: https://creativecommons.org/licenses/by/4.0/

Please cite the original version:

Kuznetsov, N. V., Lobachev, M. Y., Yuldashev, M. V., & Yuldashev, R. V. (2021). The Egan problem on the pull-in range of type 2 PLLs. IEEE Transactions on Circuits and Systems II: Express Briefs, 68(4), 1467-1471. https://doi.org/10.1109/tcsii.2020.3038075

This article has been accepted for publication in a future issue of this journal, but has not been fully edited. Content may change prior to final publication. Citation information: DOI 10.1109/TCSII.2020.3038075, IEEE Transactions on Circuits and Systems II: Express Briefs

The Egan problem on the pull-in range of type 2 PLLs

N.V. Kuznetsov, M.Y. Lobachev, M.V. Yuldashev, R.V. Yuldashev

***Abstract*—In 1981, famous engineer William F. Egan conjectured that a higher-order type 2 PLL with an infinite hold-in range also has an infinite pull-in range, and supported his conjecture with some third-order PLL implementations. Although it is known that for the second-order type 2 PLLs the hold-in range and the pull-in range are both infinite, the present paper shows that the Egan conjecture may be not valid in general. We provide an implementation of the third-order type 2 PLL, which has an infinite hold-in range and experiences stable oscillations. This implementation and the Egan conjecture naturally pose a problem, which we will call the Egan problem: *to determine a class of type 2 PLLs for which an infinite hold-in range implies an infinite pull-in range.* Using the direct Lyapunov method for the cylindrical phase space we suggest a sufficient condition of the pull-in range infiniteness, which provides a solution to the Egan problem.**

***Index Terms*—Phase-locked loop, PLL, type II, type 2, hold-in range, Egan conjecture, Egan problem on the pull-in range, Gardner problem on the lock-in range, Lyapunov functions, nonlinear analysis, global stability, describing function, harmonic balance method.**

I. Introduction

PHASE-LOCKED LOOPS (PLLs) are classical nonlinear control systems for phase and frequency synchronization in electrical circuits [1]–[3]. A PLL includes the following three key elements: a phase detector (PD), a loop filter, and a voltage-controlled oscillator (VCO). The phase detector extracts a phase error, which is the phase difference between the reference signal and the output signal of the VCO, and then the resulting signal is filtered by the loop filter. The output of the loop filter controls the VCO frequency in such a way as to reduce the phase error, i.e., to synchronize the signals. In order to characterize the synchronization properties, the following frequency difference concepts are widely used: a hold-in range, a pull-in range (or an acquisition range), and a lock-in range [4]–[7].

In engineering practice, the so-called *type 2 PLLs* having loop filters with exactly one pole at the origin are most often used [3]. In 1959, Andrew J. Viterbi applied the phase-plane analysis and stated that the second-order type 2 PLL models have infinite (theoretically) hold-in and pull-in ranges for any loop parameters [8, p.12], [1]. However, his proof was incomplete (see, e.g. discussion in [9]). Later, Viterbi's statement was rigorously proved using the direct Lyapunov method ideas [10], [11].

Since the second-order PLLs may not provide the required noise reductions [3], [5], [12], [13], some extra poles with negative real parts are often added in the loop filter [3], [6], [14]. In practice, the higher-order loops are widely used. For a type 2 PLL of any order, the each of the hold-in and pull-in ranges is either infinite or empty (see Section III). In 1981, William F. Egan conjectured [15, p.176] that a higher-order *type 2 PLL with an infinite hold-in range also has an infinite pull-in range*, and supported it with some third-order PLL implementations (see also [16, p.192], [6, p.161], [17, p.245]). Nowadays, similar claims can be found in various publications (see, e.g. [18, p.96], [19, p.171], [20, p.198], [21, p.6], and others).

The present paper introduces a counterexample to the Egan conjecture: a type 2 PLL with an infinite hold-in range and a persistent oscillation, which indicates the emptiness of the pull-in range. The observed stable oscillation and the Egan conjecture naturally pose the following problem, which we will call *the Egan problem*: *to determine a class of type 2 PLLs for which an infinite hold-in range implies an infinite pull-in range.* For such a class of PLLs the global stability conditions can be obtained by straightforward linear methods. Notice that similar problems are well-known in the mathematical control theory (see, e.g. the Aizerman and Kalman conjectures [22]–[24]). Using the direct Lyapunov method for the cylindrical phase space we obtain a sufficient condition of the pull-in range infiniteness, thereby providing a solution to the Egan problem.

II. Counterexample to the Egan conjecture

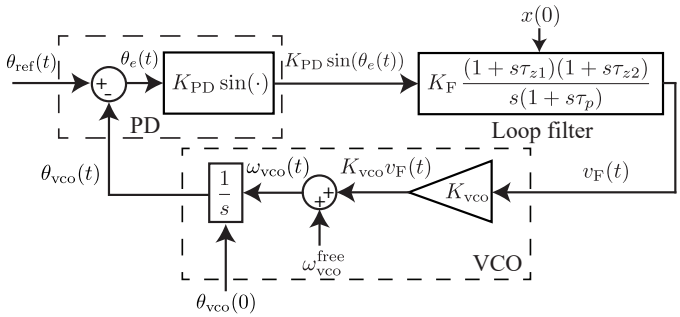

Fig. 1. Baseband model of the third-order analog PLL.

Consider the PLL baseband model [1], [3], [5], [25] in Fig.1 and its realization in MATLAB Simulink in Fig. 2. Here $\theta_{\rm ref}(t) = \omega_{\rm ref}t + \theta_{\rm ref}(0)$ is a phase of the reference signal, a

Nikolay V. Kuznetsov is with the Faculty of Mathematics and Mechanics, Saint Petersburg State University, Russia, with the Faculty of Information Technology, University of Jyväskylä, Finland, and also with the Institute for Problems in Mechanical Engineering RAS, Russia nkuznetsov239@gmail.com

Mikhail Y. Lobachev, Marat V. Yuldashev, Renat V. Yuldashev are with the Faculty of Mathematics and Mechanics, Saint Petersburg State University, Russia

This work is licensed under a Creative Commons Attribution 4.0 License. For more information, see https://creativecommons.org/licenses/by/4.0/

This article has been accepted for publication in a future issue of this journal, but has not been fully edited. Content may change prior to final publication. Citation information: DOI 10.1109/TCSII.2020.3038075, IEEE Transactions on Circuits and Systems II: Express Briefs

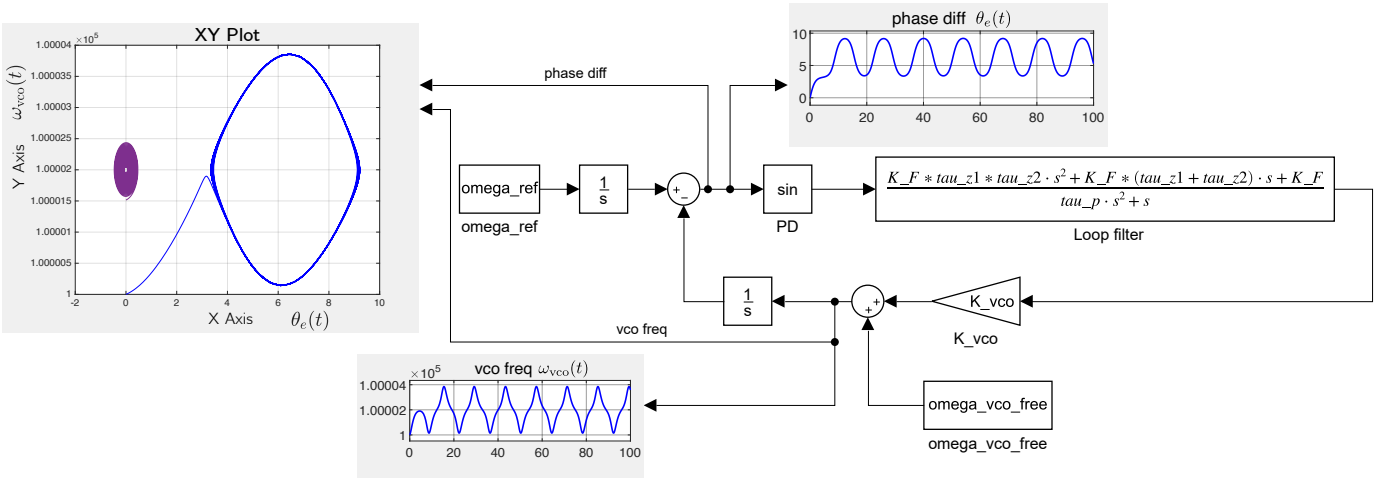

Fig. 2. Simulation of a type 2 PLL with infinite hold-in range in MATLAB Simulink (baseband model). The curve from the zero initial state $x_1(0) = x_2(0) = \theta_{\text{ref}}(0) = \theta_{\text{vco}}(0) = 0$ tends to a persistent oscillation (the blue color); the curve with the initial state $x_1(0) = 1.5$, $x_2(0) = 0$, $\theta_{\text{ref}}(0) = \theta_{\text{vco}}(0) = 0$ tends to the zero locked state (the purple color). Parameters: $\omega_{\text{ref}} = 2 + 10^5$, $\omega_{\text{vco}}^{\text{free}} = 10^5$, $F(s) = 1.01\,\frac{(1+0.4s)(1+0.4s)}{s(1+0.9s)}$, $K_{\text{vco}} = K_{\text{PD}} = 1$.

phase of the VCO is $\theta_{\text{vco}}(t)$, $\theta_e(t) = \theta_{\text{ref}}(t) - \theta_{\text{vco}}(t)$ is a phase error. The phase detector generates a signal $K_{\text{PD}}\sin(\theta_e(t))$ where K_{PD} is a gain and $\sin(\cdot)$ is a characteristic of the phase detector. The state of the loop filter is represented by $x(t) = (x_1(t),\ x_2(t)) \in \mathbb{R}^2$ and the transfer function [26] is

$$F(s) = K_{\text{F}}\frac{(1+s\tau_{z1})(1+s\tau_{z2})}{s(1+s\tau_p)}, \qquad (1)$$
$$K_{\text{F}} > 0,\ \tau_{z1} > 0,\ \tau_{z2} > 0,\ \tau_p > 0,\ \tau_{z1} \neq \tau_p,\ \tau_{z2} \neq \tau_p.$$

The output of the loop filter $v_{\text{F}}(t) = K_{\text{F}}(x_1(t) + x_2(t) + \frac{\tau_{z1}\tau_{z2}}{\tau_p}K_{\text{PD}}\sin(\theta_e(t)))$ is used to control the VCO frequency $\omega_{\text{vco}}(t)$, which is proportional to the control voltage:

$$\omega_{\text{vco}}(t) = \dot{\theta}_{\text{vco}}(t) = \omega_{\text{vco}}^{\text{free}} + K_{\text{vco}}v_{\text{F}}(t)$$

where K_{vco} is a gain and $\omega_{\text{vco}}^{\text{free}}$ is a free-running frequency of the VCO. Observe that the phase error $\theta_e(t)$ depends on the frequency error $\omega_e^{\text{free}} = \omega_{\text{ref}} - \omega_{\text{vco}}^{\text{free}}$ and not on the frequencies themselves. Therefore, transient processes in the model can be studied with respect to ω_e^{free}. For the loop filter transfer function (1), one of the possible implementations[1] is shown in Fig. 3. Since the loop filter transfer function has exactly one pole at the origin, the considered PLL model is a *type 2* one [3, p.12], [6, p.59].

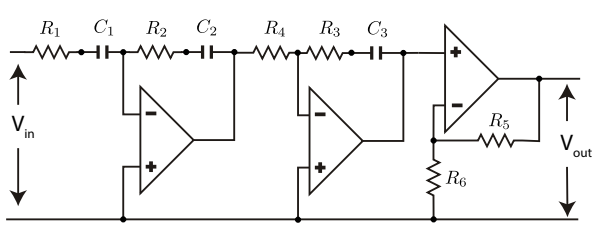

Fig. 3. An active loop filter with the transfer function $F(s) = (1 + \frac{R_5}{R_6})\frac{C_1}{C_2C_3R_4}\frac{(1+sR_2C_2)(1+sR_3C_3)}{s(1+sR_1C_1)}$.

[1]There are other implementations of transfer function (1) (e.g. the passive ones), some of which pose additional physical restrictions on parameters and lead to an infinite pull-in range.

The PLL baseband model in Fig. 2 is *locked* if the phase error $\theta_e(t)$ is constant (phase-locked condition). For the locked states of practically used PLLs, the loop filter state is constant too (see Section III for type 2 PLLs). Thus, for arbitrary ω_e^{free}, the locked states correspond to the stationary states of the model. Such locked states, which the model returns to after a small perturbation of the loop filter state and the phase error, are called (locally) *asymptotically stable* and observed in practice.

Definition 1 (Hold-in range [7], [27], [28]): A *hold-in range* is the largest symmetric interval of frequency errors $|\omega_e^{\text{free}}| \in [0,\ \omega_h)$ such that an asymptotically stable locked state exists and varies continuously while ω_e^{free} varies continuously within the interval; ω_h is called a *hold-in frequency*.

In the above definition, the locked states are considered as a function of ω_e^{free} having a continuous single-valued branch (to exclude a case of multi-valued branch when some of the locked states may appear or disappear while the frequency error ω_e^{free} varies).

Definition 2 (Pull-in range [7], [27], [28]): A *pull-in range* is the largest symmetric interval of frequency errors from the hold-in range $|\omega_e^{\text{free}}| \in [0,\ \omega_p)$ such that a locked state is acquired for an arbitrary initial state; ω_p is called a *pull-in frequency*.

Remark that from some initial states the model state can tend to an unstable stationary state. To avoid such situation for all initial states (see, e.g. the discussion of corresponding artificial examples in [29]) the condition $[0,\ \omega_p) \subset [0,\ \omega_h)$ is required in the pull-in range definition.

For the counterexample to the Egan conjecture in Fig. 2, we consider the following parameters:

$$K_{\text{vco}} = K_{\text{PD}} = 1,\ K_{\text{F}} = 1.01,\ \tau_{z1} = \tau_{z2} = 0.4,\ \tau_p = 0.9, \qquad (2)$$
$$\omega_{\text{ref}} = 2 + 10^5,\ \omega_{\text{vco}}^{\text{free}} = 10^5.$$

The model state with initial state $x_1(0) = 2$, $x_2(0) = 0$, $\theta_{\text{ref}}(0) = 0$, $\theta_{\text{vco}}(0) = -0.7$ in Fig. 2 tends to the zero locked

This work is licensed under a Creative Commons Attribution 4.0 License. For more information, see https://creativecommons.org/licenses/by/4.0/

This article has been accepted for publication in a future issue of this journal, but has not been fully edited. Content may change prior to final publication. Citation information: DOI 10.1109/TCSII.2020.3038075, IEEE Transactions on Circuits and Systems II: Express Briefs

state. Since for type 2 PLLs the hold-in and the pull-in ranges are either infinite or empty, the simulation indicates the hold-in range infiniteness (see Section III for a rigorous analysis). Following the Egan conjecture, the pull-in range should be infinite too. However, for the zero initial state $x(0)=0,\ \theta_{\text{ref}}(0)=\theta_{\text{vco}}(0)=0$ the simulation shows persistent oscillation of the control signal (see the plots of the VCO frequency $\omega_{\text{vco}}(t)$, the phase error $\theta_e(t)$, and their combined XY plot in Fig. 2).

III. Nonlinear analysis and solution to the Egan problem

Consider a state-space representation of the third-order type 2 PLL in Fig. 1:

$$\begin{cases} \dot{x}_1 = K_{\text{PD}}\sin\theta_e, \\ \dot{x}_2 = -\dfrac{1}{\tau_p}x_2 + \dfrac{(\tau_{z1}-\tau_p)(\tau_p-\tau_{z2})}{\tau_p^2}K_{\text{PD}}\sin\theta_e, \\ \dot{\theta}_e = \omega_e^{\text{free}} - K_{\text{F}}K_{\text{vco}}\left(x_1+x_2+\dfrac{\tau_{z1}\tau_{z2}}{\tau_p}K_{\text{PD}}\sin\theta_e\right). \end{cases} \tag{3}$$

System (3) is not changed under the transformation

$$\big(\omega_e^{\text{free}}, x_1(t), x_2(t), \theta_e(t)\big) \to \big(-\omega_e^{\text{free}}, -x_1(t), -x_2(t), -\theta_e(t)\big),$$

and, thus, it can be studied for $\omega_e^{\text{free}} \geq 0$ only. Besides using the linear change of variables

$$z(t) = \omega_e^{\text{free}} - K_{\text{F}}K_{\text{vco}}x_1(t),$$

we can exclude ω_e^{free} from the system. Thus, its stability does not depend on ω_e^{free} and the hold-in and pull-in ranges are either infinite or empty.

The stationary states of system (3) are $(\omega_e^{\text{free}}/(K_{\text{F}}K_{\text{vco}}),\ 0,\ \pi k),\ k\in\mathbb{Z}$. The characteristic equation of system (3) linearized at stationary states is

$$\chi(s) = s^2(1+s\tau_p) + K_{\text{PD}}K_{\text{F}}K_{\text{vco}}(1+s\tau_{z1})(1+s\tau_{z2})\cos(\pi k).$$

From the Routh-Hurwitz criterion, it follows that the stationary states $(\omega_e^{\text{free}}/(K_{\text{F}}K_{\text{vco}}),\ 0,\ 2\pi k),\ k\in\mathbb{Z}$ are asymptotically stable for any $k\in\mathbb{Z}$ if and only if the following condition is satisfied:

$$K_{\text{PD}}K_{\text{F}}K_{\text{vco}}\tau_{z1}\tau_{z2}(\tau_{z1}+\tau_{z2}) > \tau_p - \tau_{z1} - \tau_{z2}, \tag{4}$$

and the stationary states $(\omega_e^{\text{free}}/(K_{\text{F}}K_{\text{vco}}),\ 0,\ \pi+2\pi k)$ are unstable. As a result, condition (4) is necessary and sufficient for the hold-in range infiniteness.

Since the pull-in range definition requires to analyse all the initial states of system (3), the conditions for the pull-in range infiniteness cannot be determined by linear analysis in general. In the following subsections, the Lyapunov direct method and the harmonic balance method are used to study the pull-in range and to solve the Egan problem.

A. Solution to the Egan problem: direct Lyapunov method

To analyse the pull-in range of system (3), we apply the direct Lyapunov method and the corresponding theorem on global stability for the cylindrical phase space (see, e.g. [29], [30]). If there is a continuous function $V(x,\theta_e):\mathbb{R}^n\to\mathbb{R}$ such that

(i) $V(x,\theta_e+2\pi) = V(x,\theta_e) \quad \forall x\in\mathbb{R}^{n-1}, \forall\theta_e\in\mathbb{R}$;

(ii) for any solution $(x(t),\theta_e(t))$ of system (3) the function $V(x(t),\theta_e(t))$ is nonincreasing;

(iii) if $V(x(t),\theta_e(t)) \equiv V(x(0),\theta_e(0))$, then $(x(t),\theta_e(t)) \equiv (x(0),\theta_e(0))$;

(iv) $V(x,\theta_e)+\theta_e^2 \to +\infty$ as $||x||+|\theta_e| \to +\infty$

then any trajectory of system (3) tends to the stationary set (i.e., the system is globally stable).

Consider the following Lyapunov function

$$V(x_1,x_2,\theta_e) = \frac{K_{\text{F}}K_{\text{vco}}}{2}\left(x_1 - \frac{\omega_e^{\text{free}}}{K_{\text{F}}K_{\text{vco}}}\right)^2 + \\ + \frac{K_{\text{F}}K_{\text{vco}}}{2}\frac{\tau_p^2(\tau_{z1}\tau_{z2}+\tau_p(\tau_{z1}+\tau_{z2}-\tau_p))}{(\tau_{z1}-\tau_p)^2(\tau_p-\tau_{z2})^2}x_2^2 + \int_0^{\theta_e} K_{\text{PD}}\sin\sigma d\sigma. \tag{5}$$

If the loop filter parameters satisfy the inequality

$$\tau_{z1}+\tau_{z2}-\tau_p > 0 \tag{6}$$

then the Lyapunov function derivative along the trajectories of system (3) is as follows:

$$\dot{V}(x_1,x_2,\theta_e) = \\ = -K_{\text{F}}K_{\text{vco}}\Big(\frac{\tau_p\tau_{z1}\tau_{z2}+\tau_p^2(\tau_{z1}+\tau_{z2}-\tau_p)}{(\tau_{z1}-\tau_p)^2(\tau_p-\tau_{z2})^2}x_2^2 - \\ - \frac{2\tau_{z1}\tau_{z2}}{(\tau_{z1}-\tau_p)(\tau_p-\tau_{z2})}x_2K_{\text{PD}}\sin\theta_e + \frac{\tau_{z1}\tau_{z2}}{\tau_p}K_{\text{PD}}^2\sin^2\theta_e\Big) < 0, \\ x_2\neq 0,\ \theta_e\neq\pi k,\ k\in\mathbb{Z}.$$

Since the derivative along any solution other than stationary states is not identically zero, condition (6) provides the global stability of the system for any ω_e^{free}. Observe that condition (4) of local stability is also valid in this case. Therefore, under condition (6) the pull-in and the hold-in ranges of system (3) are infinite:

$$[0,\omega_p) = [0,\omega_h) = [0,\ +\infty).$$

Notice that in this case the classical Barbashin-Krasovsky and LaSalle theorems cannot be directly used with the Lyapunov functions of type (5) to study global stability, because for that the Lyapunov function $V(x,\theta_e)$ must be radially unbounded while $V(0,\theta_e) \not\to +\infty$ as $|\theta_e| \to +\infty$. The discussion of radial unboundedness is sometimes omitted in the existing literature (see, e.g. [26], [31], [32]).

Condition (6) determines a class of type 2 PLLs for which an infinite hold-in range implies an infinite pull-in range, thus providing a *solution to the Egan problem*. The above reasoning provides also an infinite pull-in range of the second-order type 2 PLL: Lyapunov function (5) without its second term and the corresponding model in Fig. 1 with $\tau_{z2}=\tau_p=0$, $\tau_{z1}>0$ satisfy the conditions of the above theorem.

Notice that the same Lyapunov function can be used to analyse transient processes and to provide *a solution to the Gardner problem on the lock-in range* [3, p. 187–188], [7], [27], [28], [33]: for the considered model a subinterval $[0,\omega_l)$ of the pull-in range over which the PLL re-establishes an

This work is licensed under a Creative Commons Attribution 4.0 License. For more information, see https://creativecommons.org/licenses/by/4.0/

This article has been accepted for publication in a future issue of this journal, but has not been fully edited. Content may change prior to final publication. Citation information: DOI 10.1109/TCSII.2020.3038075, IEEE Transactions on Circuits and Systems II: Express Briefs

asymptotically stable locked state without cycle slipping may be estimated as $[0,\omega_l) \supset [0,\sqrt{K_{\rm PD}K_{\rm F}K_{\rm vco}})$ (see, e.g. [33]).

Relation (6) is not satisfied for parameters (2). The gap between conditions (4) and conditions (6) poses the problem of studying this domain of parameters and the boundary of global stability (which parts can be either *trivial*, i.e., determined by local bifurcations, or *hidden*, i.e., determined by non-local bifurcations and the birth of hidden oscillations) [24], [29].

B. Analysis of periodic solutions: the harmonic balance method and phase portrait analysis

To analyse the PLL model behavior in the gap between conditions (4) and (6) (particularly to analyse oscillations in Fig. 2), the harmonic balance method and phase portrait analysis are used in this section. The harmonic balance method is widely used by engineers to predict oscillations in nonlinear systems and to check the global stability of phase-locked loops (see, e.g. [2], [34]–[38]), while the method is known to be an approximate one and to work well only when the *filter conjecture* is valid [39, p. 164], [40, p.329].

Following the harmonic balance method, we suppose that system (3) has a periodic solution (cycle)

$$\theta_e(t) \approx \delta\omega_0 t + a_0 \sin(\omega_0 t)$$

where a_0 is an amplitude and $\omega_0 > 0$ is a frequency, $\delta = 0$ for the cycles of the first kind, and $\delta = 1$ for the cycles of the second kind. Solving the describing function equation [38], one gets the following solution:

$$\begin{aligned} &\omega_0 = \sqrt{\frac{\tau_p - \tau_{z1} - \tau_{z2}}{\tau_{z1}\tau_p\tau_{z2}}}, \\ &\frac{J_{1-\delta}(a_0) - J_{1+\delta}(-a_0)}{a_0} = \frac{\tau_p - \tau_{z1} - \tau_{z2}}{K_{\rm F}K_{\rm vco}\tau_{z1}\tau_{z2}(\tau_{z1}+\tau_{z2})} \end{aligned} \tag{7}$$

where $J_{0,1,2}(a)$ are the Bessel functions of the first kind:

$$J_k(a) = \frac{1}{\pi}\int_0^{\pi} \cos(kt - a\sin t)dt, \quad k \in \mathbb{Z}.$$

In this case, according to the harmonic balance method, a periodic solution does not develop in system (3) if condition (6) is met (there is no positive frequency $\omega_0 > 0$). Otherwise, if condition (6) is not fulfilled, then the frequency $\omega_0 \geq 0$ and amplitude a_0 satisfying equation (7) exist. Thus, the harmonic balance method does not improve the condition of global stability obtained by the direct Lyapunov method for the considered model.

The phase portrait of the type 2 PLL with parameters (2), considered for the numerical counterexample, is shown in Fig. 4. The trajectory with initial state $x_1(0) = 2$, $x_2(0) = 0$, $\theta_e(0) = 0.7 + 2\pi$ tends to an asymptotically stable equilibrium.

The dashed curve depicts possible unstable cycle, predicted by harmonic balance equations (7) with $\delta = 0$, $\omega_0 \approx 0.83$, $a_0 \approx 1.4$. Notice that equations (7) give only possible frequency and amplitude of a periodic solution but do not give any initial data of the solution. To visualize this trajectory in Fig. 4 we use the initial data provided by theorem from [22].

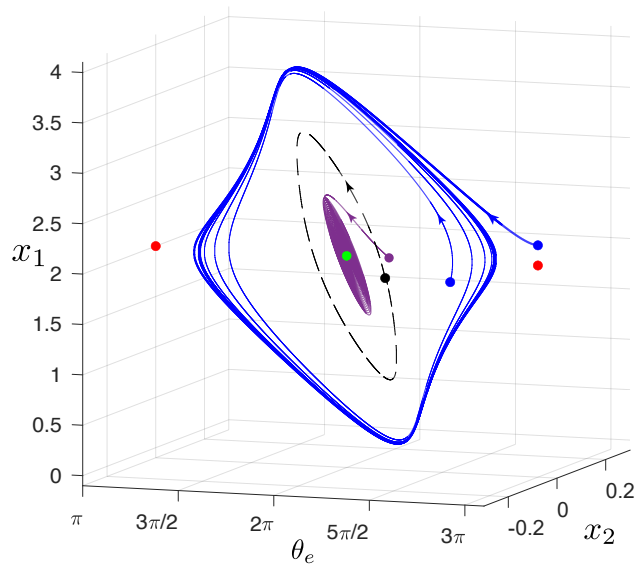

Fig. 4. Phase portrait of system (3). The green and red dots are asymptotically stable and unstable equilibria, respectively. The purple trajectory tends to an asymptotically stable equilibrium (green dot). The black dashed line depicts possible unstable periodic orbit, predicted by harmonic balance equations (7). The blue trajectories tend to stable limit cycle. Parameters: $\omega_e^{\rm free} = 2$, $K_{\rm F} = 1.01$, $\tau_{z1} = \tau_{z2} = 0.4$, $\tau_p = 0.9$, $K_{\rm vco} = K_{\rm PD} = 1$.

The trajectories with initial states $x_1(0) = 2.2$, $x_2(0) = 0$, $\theta_e(0) = 3\pi$ and $x_1(0) = 2$, $x_2(0) = -0.2$, $\theta_e(0) = 2.5 + 2\pi$ in Fig. 4 tend to a stable limit cycle, which can be classified as a self-excited oscillation [22]. This stable limit cycle corresponds to the periodic oscillation shown in Fig. 2. As it is stated above, this oscillation is not predicted by the harmonic balance and equations (7). A probable reason is that the stable limit cycle has a complex structure, which is far from the shape of a simple harmonic oscillation. As a result, the harmonic balance method is unable to predict this stable limit cycle, whereas it is necessary to avoid such oscillations in practice.

IV. Conclusion

Since PLLs are essentially nonlinear control systems, their non-local analysis and the pull-in range estimation are challenging tasks. Therefore, classes of PLL systems for which conditions of local (linear) and global (nonlinear) stability coincide (thus, providing a coincidence of the hold-in and the pull-in ranges), are of interest. For type 2 PLLs the Egan conjecture states that an infinite hold-in range implies an infinite pull-in range. While this conjecture is valid for the second-order loops, the third-order loop considered in this paper provides a counterexample to the Egan conjecture. It is shown that stable periodic oscillations in PLLs may not be revealed by the classical harmonic balance method. A sufficient condition, guaranteeing an infinite pull-in range, is obtained by the direct Lyapunov method for the cylindrical phase space. This condition determines a class of type 2 PLLs for which both the hold-in and the pull-in ranges are infinite, thus, providing a solution to the Egan problem.

Notice that similar conjectures on the pull-in range for some other types of PLLs are also known: for example, *the*

This work is licensed under a Creative Commons Attribution 4.0 License. For more information, see https://creativecommons.org/licenses/by/4.0/

This article has been accepted for publication in a future issue of this journal, but has not been fully edited. Content may change prior to final publication. Citation information: DOI 10.1109/TCSII.2020.3038075, IEEE Transactions on Circuits and Systems II: Express Briefs

Kapranov conjecture on the pull-in range of the second-order type 1 PLLs [41] and *the Gardner conjecture* on the similarity of the transient response of charge-pump PLL (CP-PLL) and equivalent classical PLL [42, p. 1856] (see, e.g. discussions of corresponding counterexamples in [43]–[45]).

ACKNOWLEDGMENT

The authors would like to thank Roland E. Best, Géza Kolumbán, and Giovanni Bianchi for valuable comments and discussions. The work is supported by the Russian Science Foundation (project 19-41-02002).

REFERENCES

[1] A. Viterbi, *Principles of coherent communications*. New York: McGraw-Hill, 1966.
[2] V. Shakhgil'dyan and A. Lyakhovkin, *Fazovaya avtopodstroika chastoty (in Russian)*, 1st ed. Moscow: Svyaz', 1966.
[3] F. Gardner, *Phaselock Techniques*, 3rd ed. New York: John Wiley & Sons, 2005.
[4] G. Kolumbán, "Phase-locked loops," in *The Encyclopedia of RF and Microwave Engineering*, K. Chang, Ed. New York: John Wiley & Sons, 2005, pp. 3735–3767.
[5] R. Best, *Phase-Locked Loops: Design, Simulation and Application*, 6th ed. McGraw-Hill, 2007.
[6] W. Egan, *Phase-Lock Basics*, 2nd ed. New York: John Wiley & Sons, 2007.
[7] G. Leonov, N. Kuznetsov, M. Yuldashev, and R. Yuldashev, "Hold-in, pull-in, and lock-in ranges of PLL circuits: rigorous mathematical definitions and limitations of classical theory," *IEEE Transactions on Circuits and Systems–I: Regular Papers*, vol. 62, no. 10, pp. 2454–2464, 2015.
[8] A. Viterbi, "Acquisition and tracking behavior of phase-locked loops," *Jet Propulsion Laboratory, California Institute of Technology, Pasadena, External Publ*, vol. 673, 1959.
[9] K. Alexandrov, N. Kuznetsov, G. Leonov, P. Neittaanmaki, and S. Seledzhi, "Pull-in range of the PLL-based circuits with proportionally-integrating filter," *IFAC-PapersOnLine*, vol. 48, no. 11, pp. 720–724, 2015.
[10] Y. Bakaev, "Stability and dynamical properties of astatic frequency synchronization system," *Radiotekhnika i Elektronika (in Russian)*, vol. 8, no. 3, pp. 513–516, 1963.
[11] K. Aleksandrov, N. Kuznetsov, G. Leonov, N. Neittaanmaki, M. Yuldashev, and R. Yuldashev, "Computation of the lock-in ranges of phase-locked loops with PI filter," *IFAC-PapersOnLine*, vol. 49, no. 14, pp. 36–41, 2016.
[12] J. Craninckx and M. Steyaert, *Wireless CMOS Frequency Synthesizer Design*. Springer, 1998.
[13] B. De Muer and M. Steyaert, *CMOS Fractional-N Synthesizers: Design for High Spectral Purity and Monolithic Integration*. Springer, 2003.
[14] L. Monteiro, D. Favaretto Filho, and J. Piqueira, "Bifurcation analysis for third-order phase-locked loops," *IEEE Signal Processing Letters*, vol. 11, no. 5, pp. 494–496, 2004.
[15] W. Egan, *Frequency synthesis by phase lock*, 1st ed. New York: John Wiley & Sons, 1981.
[16] ——, *Phase-Lock Basics*, 1st ed. New York: John Wiley & Sons, 1998.
[17] ——, *Frequency synthesis by phase lock*, 2nd ed. New York: John Wiley & Sons, 2000.
[18] S. Aguirre, D. Brown, and W. Hurd, "Phase lock acquisition for sampled data PLL's using the sweep technique," *TDA Progress Report 42-86*, vol. April-June, 1986, pp. 95–102, 1986.
[19] D. Banerjee, *PLL performance, simulation and design*, 3rd ed. Dog Ear Publishing, 2003.
[20] ——, *PLL performance, simulation and design*, 4th ed. Dog Ear Publishing, 2006.
[21] A. Fahim, *Clock Generators for SOC Processors: Circuits and Architectures*. Springer Science & Business Media, 2005.
[22] G. Leonov and N. Kuznetsov, "Hidden attractors in dynamical systems. From hidden oscillations in Hilbert-Kolmogorov, Aizerman, and Kalman problems to hidden chaotic attractors in Chua circuits," *International Journal of Bifurcation and Chaos in Applied Sciences and Engineering*, vol. 23, no. 1, 2013, art. no. 1330002.
[23] I. Boiko, N. Kuznetsov, R. Mokaev, T. Mokaev, M. Yuldashev, and R. Yuldashev, "On counter-examples to Aizerman and Kalman conjectures," *International Journal of Control*, 2020, https://doi.org/10.1080/00207179.2020.1830304.
[24] N. Kuznetsov, "Theory of hidden oscillations and stability of control systems," *Journal of Computer and Systems Sciences International*, vol. 59, no. 5, pp. 647–668, 2020.
[25] G. Leonov, N. Kuznetsov, M. Yuldashev, and R. Yuldashev, "Analytical method for computation of phase-detector characteristic," *IEEE Transactions on Circuits and Systems - II: Express Briefs*, vol. 59, no. 10, pp. 633–647, 2012.
[26] A. Carlosena and A. Mànuel-Lázaro, "Design of high-order phase-lock loops," *IEEE Transactions on Circuits and Systems II: Express Briefs*, vol. 54, no. 1, pp. 9–13, 2007.
[27] N. Kuznetsov, G. Leonov, M. Yuldashev, and R. Yuldashev, "Rigorous mathematical definitions of the hold-in and pull-in ranges for phase-locked loops," *IFAC-PapersOnLine*, vol. 48, no. 11, pp. 710–713, 2015.
[28] R. Best, N. Kuznetsov, G. Leonov, M. Yuldashev, and R. Yuldashev, "Tutorial on dynamic analysis of the Costas loop," *IFAC Annual Reviews in Control*, vol. 42, pp. 27–49, 2016.
[29] N. Kuznetsov, M. Lobachev, M. Yuldashev, R. Yuldashev, E. Kudryashova, O. Kuznetsova, E. Rosenwasser, and S. Abramovich, "The birth of the global stability theory and the theory of hidden oscillations," in *2020 European Control Conference Proceedings*, 2020, pp. 769–774.
[30] G. Leonov and N. Kuznetsov, *Nonlinear mathematical models of phase-locked loops. Stability and oscillations*. Cambridge Scientific Publishers, 2014.
[31] D. Abramovitch, "Analysis and design of a third order phase-lock loop," in *21st Century Military Communications – What's Possible?. Conference record. Military Communications Conference*, 1988, pp. 455–459.
[32] ——, "Lyapunov redesign of analog phase-lock loops," *Communications, IEEE Transactions on*, vol. 38, no. 12, pp. 2197–2202, 1990.
[33] N. Kuznetsov, M. Lobachev, M. Yuldashev, and R. Yuldashev, "On the Gardner problem for phase-locked loops," *Doklady Mathematics*, vol. 100, no. 3, pp. 568–570, 2019.
[34] J. Woodbury, "Phase-locked loop pull-in range," *IEEE Transactions on Communication Technology*, vol. 16, no. 1, pp. 184–186, 1968.
[35] H. Fleischmann, R. Leonhardt, and J. Woodbury, "Comments on "Phase-locked loop pull-in range"," *IEEE Transactions on Communication Technology*, vol. 17, no. 1, pp. 89–90, 1969.
[36] J. Tal, "On the pull-in range of phase-locked loops," *IEEE Transactions on Communications*, vol. 23, no. 3, pp. 390–393, 1975.
[37] A. Homayoun and B. Razavi, "On the stability of charge-pump phase-locked loops," *IEEE Transactions on Circuits and Systems I: Regular Papers*, vol. 63, no. 6, pp. 741–750, 2016.
[38] N. Kuznetsov, M. Lobachev, M. Yuldashev, R. Yuldashev, and G. Kolumbán, "Harmonic balance analysis of pull-in range and oscillatory behavior of third-order type 2 analog PLLs," *IFAC-PapersOnLine*, 2020, (21st IFAC World Congress).
[39] M. Garcia-Sanz, *Robust control engineering: practical QFT solutions*. CRC Press, 2017.
[40] B. Lurie and P. Enright, *Classical Feedback Control with Nonlinear Multi-Loop Systems: With MATLAB® and Simulink®*. CRC Press, 2019.
[41] M. Kapranov, "Locking band for phase-locked loop," *Radiofizika (in Russian)*, vol. 11, no. 12, pp. 37–52, 1956.
[42] F. Gardner, "Charge-pump phase-lock loops," *IEEE Transactions on Communications*, vol. 28, no. 11, pp. 1849–1858, 1980.
[43] N. Kuznetsov, G. Leonov, M. Yuldashev, and R. Yuldashev, "Hidden attractors in dynamical models of phase-locked loop circuits: limitations of simulation in MATLAB and SPICE," *Communications in Nonlinear Science and Numerical Simulation*, vol. 51, pp. 39–49, 2017.
[44] N. Kuznetsov, M. Yuldashev, R. Yuldashev, M. Blagov, E. Kudryashova, O. Kuznetsova, and T. Mokaev, "Comments on van Paemel's mathematical model of charge-pump phase-locked loop," *Differential Equations and Control Processes (Differencialnie Uravnenia i Protsesy Upravlenia)*, no. 1, pp. 109–120, 2019, https://diffjournal.spbu.ru/pdf/19107-jdecp-kuznetsov.pdf.
[45] N. Kuznetsov, A. Matveev, M. Yuldashev, R. Yuldashev, and G. Bianchi, "Stability of charge-pump phase-locked loops: the hold-in and pull-in ranges," *IFAC-PapersOnLine*, 2020, (21st IFAC World Congress).

This work is licensed under a Creative Commons Attribution 4.0 License. For more information, see https://creativecommons.org/licenses/by/4.0/