Jyväskylän yliopiston julkaisuarkisto
Jyväskylä University Digital Archive

UNIVERSITY OF JYVÄSKYLÄ

This is an electronic reprint of the original article.
This reprint *may differ* from the original in pagination and typographic detail.

Author(s): Haslinger, J.; Neittaanmäki, Pekka

Title: Shape optimization in contact problems : Approximation and numerical realization

Year: 1987

Version:

Please cite the original version:

Haslinger, J. & Neittaanmäki, P. (1987). Shape optimization in contact problems : Approximation and numerical realization. Mathematical Modelling and Numerical Analysis , 21 (2), 269-291.

All material supplied via JYX is protected by copyright and other intellectual property rights, and duplication or sale of all or part of any of the repository collections is not permitted, except that material may be duplicated by you for your research use or educational purposes in electronic or print form. You must obtain permission for any other use. Electronic or print copies may not be offered, whether for sale or otherwise to anyone who is not an authorised user.

A2/41

MATHEMATICAL MODELLING AND NUMERICAL ANALYSIS
MODÉLISATION MATHÉMATIQUE ET ANALYSE NUMÉRIQUE

(Vol. 21, n° 2, 1987, p. 269 à 291)

SHAPE OPTIMIZATION IN CONTACT PROBLEMS. APPROXIMATION AND NUMERICAL REALIZATION (*)

by J. HASLINGER (1) and P. NEITTAANMÄKI (2)

Communicated by F. G. CIARLET

Abstract. — *The optimal shape design of a two-dimensional elastic body on rigid foundation is analyzed. The relation between the continuous problem and the discrete problem achieved by FEM is presented. A numerical realization together with the sensitivity analysis is given. Several numerical examples to illustrate the practical use of the methods are presented.*

Résumé. — *On étudie l'approximation du problème de l'optimisation de domaine dans un problème de contact d'un corps élastique, unilatéralement supporté par la fondation rigide. Deux essais numériques sont présentés.*

1. INTRODUCTION

This paper deals with the shape optimization of a contact surface of a two-dimensional elastic body unilaterally supported by a rigid frictionless foundation. The problem is to redesign the contact surface in such a way that the total potential energy of the system in the equilibrium state will be minimal.

In [9] the proof of the existence of an optimal shape is given. In the present paper we shall study finite element discretization of this problem and discuss the relation between continuous and discrete models (Sections 2 and 3). When the discretization has been done, our discrete design formulation leads to a nonconvex but smooth minimization problem with linear constraints. The evaluation of the cost functional involves the solving of the nonlinear state problem (variational inequality). Consequently, NLP-algorithm should use as few function evaluations as possible. Clearly, some gradient information is then necessary. In Section 4 we shall present

(*) Received in September 1985.

(1) Charles University, Faculty of Mathematics and Physics, KFK MFF UK, Malostranské 2/25 CS, 11800 Prague, Czechoslovakia.

(2) University of Jyväskylä, Department of Mathematics, Seminaarinkatu 15, SF-40100 Jyväskylä, Finland.

formula for the derivative of the cost functional. For the case where the method of penalization is utilized for solving the state problem we refer to [7, 8, 10].

In chapter 5 several numerical examples are given. They show, among others, that as a by-product we can find a shape for the contact part of the body that the contact stress will be evenly distributed when geometrical constraints are appropriate. This is of a great practical importance for designers. From the mathematical point of view, the functional of the total potential energy is easy to handle whereas the direct minimization of contact stresses is more involved.

In this paper the shape design problem for an elastic body on a rigid frictionless foundation is analyzed. When the friction between the body and the support is taken into account the problem is technically more complicated but principally the methods present here can be applied. For the case of a given friction — which is the simplest model — we refer to the paper [6].

For the mathematical theory of optimum shape design problem with classical boundary value problems together with approximation we refer to the recent book of O. Pironneau [16]. See also conference volumes [1, 11, 13].

2. SETTING OF THE PROBLEM

Let us consider a two-dimensional elastic body $\Omega \equiv \Omega(\alpha) \subset \mathbb{R}^2$ having the following geometrical structure :

$$\Omega(\alpha) = \{(x_1, x_2) \in \mathbb{R}^2 \mid a < x_1 < b,\ 0 \leq \alpha(x_1) < x_2 < \gamma\} .$$

a, b, γ are given constants and $\alpha \in C^{0,1}([a, b])$, i.e. α is a Lipschitz function on $[a, b]$, $\partial\Omega(\alpha) = \bar{\Gamma}_D \cup \bar{\Gamma}_P \cup \bar{\Gamma}_C(\alpha)$, $\Gamma_D \neq \varnothing$ (possible partition of $\partial\Omega(\alpha)$ is given by *Fig.* 2.1).

The shape of the contact surface $\Gamma_C(\alpha)$ is described by a graph of the function α, belonging to the set $\mathscr{U}_{ad}$, where

$$\mathscr{U}_{ad} = \{\alpha \in C^{0,1}([a, b]) \mid 0 \leq \alpha(x_1) \leq C_0 < \gamma,\ |\alpha'(x_1)| \leq C_1,\ x_1 \in [a, b],\ \text{meas}\, \Omega(\alpha) = C_2\} . \tag{2.1}$$

C_0, C_1, C_2 are given positive constants such that $\mathscr{U}_{ad} \neq \varnothing$.

Suppose that $\Omega(\alpha)$ is unilaterally supported by a rigid frictionless foundation (here by the set $\{(x_1, x_2) \in \mathbb{R}^2 \mid x_2 \leq 0\}$ and subject to a body force $\mathbf{F} = (F_1, F_2)$ and surface tractions $\mathbf{P} = (P_1, P_2)$ on Γ_P.

Classical solution of the contact problem without friction is defined as a

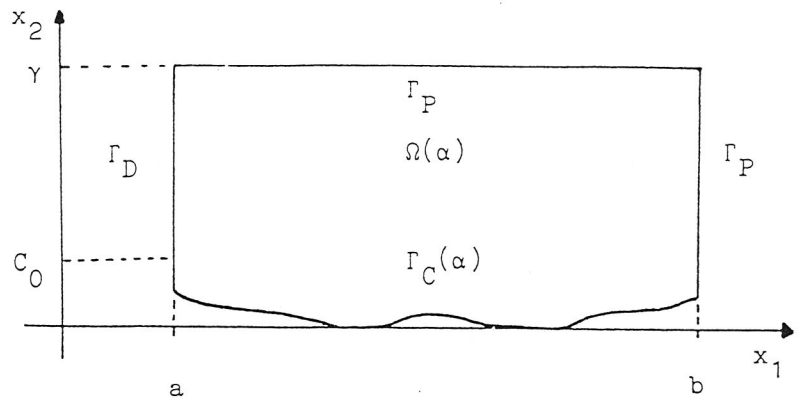

Fig. 2.1 $\Omega(\alpha)$

displacement field $\mathbf{u} = \mathbf{u}(\alpha) = (u_1(\alpha), u_2(\alpha))$ (the dependence of $\mathbf{u}$ on α is emphasized by writing $\mathbf{u} = \mathbf{u}(\alpha)$), which is in the equilibrium state with applied forces, i.e.

$$\frac{\partial}{\partial x_j} \tau_{ij}(\mathbf{u}) + F_i = 0 \quad \text{in} \quad \Omega(\alpha) , \quad i = 1, 2 ; \tag{2.2}$$

$$T_i \equiv \tau_{ij}(\mathbf{u}) n_j = P_i \quad \text{on} \quad \Gamma_P , \quad i = 1, 2 \tag{2.3}$$

$\mathbf{n} = (n_1, n_2)$ is the unit normal vector to $\partial\Omega$. We suppose that the stress tensor $\tau(\mathbf{u}) = (\tau_{ij}(\mathbf{u}))_{i,j=1}^2$ is related to the linear strain tensor $\varepsilon(\mathbf{u}) = (\varepsilon_{ij}(\mathbf{u}))_{i,j=1}^2$ by means of the linear Hooke's law

$$\tau_{ij}(\mathbf{u}) = C_{ijkl}\, \varepsilon_{kl}(\mathbf{u}) , \quad \varepsilon_{kl}(\mathbf{u}) = \frac{1}{2} \left(\frac{\partial u_k}{\partial x_l} + \frac{\partial u_l}{\partial x_k} \right)$$

with elasticity coefficients C_{ijkl} satisfying the usual symmetry and ellipticity conditions in $\hat{\Omega} = (a, b) \times (0, \gamma)$, $C_{ijkl} \in L^\infty(\hat{\Omega})$. Besides (2.2) and (2.3) the following boundary conditions will be assumed :

$$u_i = 0 \quad \text{on} \quad \Gamma_D , \quad i = 1, 2 ; \tag{2.4}$$

$$u_2(x_1, \alpha(x_1)) \geq -\alpha(x_1) \quad \forall x_1 \in [a, b] ; \tag{2.5}$$

$$T_1(\mathbf{u}) = 0 \quad \text{on} \quad \Gamma_C(\alpha) ; \tag{2.6}$$

$$T_2(\mathbf{u}) \geq 0 , \quad (u_2 + \alpha)\, T_2(\mathbf{u}) = 0 \quad \text{on} \quad \Gamma_C(\alpha) . \tag{2.7}$$

In order to give the variational formulation of (2.2)-(2.7) we introduce a Hilbert space $V(\alpha)$ of virtual displacements

$$(2.8)\quad V(\alpha) \equiv V(\Omega(\alpha)) = \{\mathbf{v} \in (H^1(\Omega(\alpha)))^2 \,|\, v_i = 0 \text{ on } \Gamma_D,\ i = 1, 2\}$$

and its closed convex subset $K(\alpha)$ of admissible displacements

$$(2.9)\quad K(\alpha) \equiv K(\Omega(\alpha)) = \\ = \{\mathbf{v} \in V(\alpha) \,|\, v_2(x_1, \alpha(x_1)) \geq -\alpha(x_1)\ \forall x_1 \in (a, b)\}\ .$$

The variational form of (2.2)-(2.7) is now given by (see [12])

$$(\mathscr{P}(\alpha))\quad \begin{cases} \text{find } \mathbf{u} = \mathbf{u}(\alpha) \in K(\alpha) \text{ such that} \\ (\tau(\mathbf{u}), \varepsilon(\mathbf{v} - \mathbf{u}))_{0,\Omega(\alpha)} \geq \langle L, \mathbf{v} - \mathbf{u}\rangle_\alpha \quad \forall \mathbf{v} \in K(\alpha)\ , \end{cases}$$

where

$$(\tau(\mathbf{u}), \varepsilon(\mathbf{v}))_{0,\Omega(\alpha)} \equiv \int_{\Omega(\alpha)} \tau_{ij}(\mathbf{u})\, \varepsilon_{ij}(\mathbf{v})\, dx$$

and

$$\langle L, \mathbf{v}\rangle_\alpha \equiv \int_{\Omega(\alpha)} F_i\, v_i\, dx + \int_{\Gamma_P} P_i\, v_i\, ds \equiv (\mathbf{F}, \mathbf{v})_{0,\Omega(\alpha)} + (\mathbf{P}, \mathbf{v})_{0,\Gamma_P}$$

with $\mathbf{F} \in (L^2(\hat{\Omega}))^2$, $\mathbf{P} \in (L^2(\partial\hat{\Omega}))^2$.

Shape optimization problem now will be stated as follows

$$(\mathbf{P})\quad \begin{cases} \text{find } \alpha^* \in \mathscr{U}_{ad} \text{ such that} \\ E(\alpha^*) \leq E(\alpha) \quad \forall \alpha \in \mathscr{U}_{ad}\ , \end{cases}$$

where

$$E(\alpha) \equiv \frac{1}{2}\,(\tau(\mathbf{u}(\alpha)), \varepsilon(\mathbf{u}(\alpha)))_{0,\Omega(\alpha)} - \langle L, \mathbf{u}(\alpha)\rangle_\alpha$$

with $\mathbf{u}(\alpha) \in K(\alpha)$ being the solution of $(\mathscr{P}(\alpha))$, is *the total potential energy* evaluated in the equilibrium state. According to [9] it holds :

THEOREM 2.1 : *Let $\mathscr{U}_{ad}$ be given by* (2.1). *Then there exists at least one solution α^* of* (**P**).

3. FINITE ELEMENT APPROXIMATION OF (P)

Approximation of (**P**) will be given by means of finite element technique. We suppose that $\mathscr{U}_{ad}$ is replaced by

$$(3.1)\quad \mathscr{U}^h_{ad} \equiv \{\alpha_h \in C([a, b]) \,|\, \alpha_h|_{[a_{i-1}, a_i]} \in P_1([a_{i-1}, a_i])\} \cap \mathscr{U}_{ad}\ ,$$

where $a \equiv a_0 < a_1 < \cdots < a_N \equiv b$ is a partition of $[a, b]$ and $P_1([a_{i-1}, a_i])$ denotes the set of linear functions over $[a_{i-1}, a_i]$. For any $\alpha_h \in \mathscr{U}^h_{ad}$ we define

$$\Omega(\alpha_h) = \{(x_1, x_2) \in \mathbb{R}^2 \,|\, a < x_1 < b,\ \alpha_h(x_1) < x_2 < \gamma\}\ ,$$

i.e. $\Omega(\alpha_h)$ is a polygonal domain and the variable part of the boundary $\Gamma_C(\alpha)$ is now replaced by a piecewise linear arc $\Gamma_C(\alpha_h)$.

By $\mathscr{T}_h(\alpha_h)$, $\alpha_h \in \mathscr{U}^h_{ad}$ we denote the triangulation of $\Omega(\alpha_h)$ such that the whole segment

$$I_i = \{(x_1, x_2) \,|\, x_1 \in [a_{i-1}, a_i],\ x_2 = \alpha_h(x_1)\}$$

is the whole side of a triangle $T_i \in \mathscr{T}_h(\alpha_h)$ and satisfying the usual requirements, concerning the mutual position of two triangles, belonging to $\mathscr{T}_h(\alpha_h)$, [3]. Moreover, we shall assume only such families of $\{\mathscr{T}_h(\alpha_h)\}$, $h \in (0, 1)$, $\alpha_h \in \mathscr{U}^h_{ad}$, which are :

(j) *Regular uniformly* with respect to $h \to 0^+$ and $\alpha_h \in \mathscr{U}^h_{ad}$, i.e. there exists $\delta_0 > 0$ independently on $h \in (0, 1)$ and $\alpha_h \in \mathscr{U}^h_{ad}$ such that all interior angles of all triangles $T_i \in \mathscr{T}_h(\alpha_h)$ are greater or equal to δ_0 (for practical applications some other technical restrictions will be added, see Section 5).

(jj) For any $h \in (0, 1)$ fixed, triangulations $\{\mathscr{T}_h(\alpha_h)\}$, $\alpha_h \in \mathscr{U}^h_{ad}$ *depend continuously* on α_h.

Finally, the symbol $\Omega_h(\alpha_h)$ will denote the set $\Omega(\alpha_h)$ with a given triangulation $\mathscr{T}_h(\alpha_h)$; for the sake of simplicity we also use the notation Ω_h instead of $\Omega_h(\alpha_h)$. With any $\mathscr{T}_h(\alpha_h)$ a closed convex subset $K_h(\alpha_h)$ of functions will be associated :

$$V_h(\alpha_h) \equiv \{\mathbf{v}_h \in (C(\overline{\Omega(\alpha_h)}))^2 \,|\, \mathbf{v}_h|_{T_i} \in (P_1(T_i))^2 \\ \text{for any } T_i \in \mathscr{T}_h(\alpha_h),\ \mathbf{v}_h = 0 \text{ on } \Gamma_D\}\ ,$$

$$K_h(\alpha_h) \equiv V_h(\alpha_h) \cap K(\alpha_h)\ .$$

The approximation of (**P**) is now defined as follows :

$$(\mathbf{P})_h\quad \begin{cases} \text{find } \alpha_h^* \in \mathscr{U}^h_{ad} \text{ such that} \\ E_h(\alpha_h^*) \leq E_h(\alpha_h) \quad \forall \alpha_h \in \mathscr{U}^h_{ad}\ , \end{cases}$$

where

$$E_h(\alpha_h) = \frac{1}{2}\,(\tau(\mathbf{u}_h(\alpha_h)), \varepsilon(\mathbf{u}_h(\alpha_h)))_{0,\Omega(\alpha_h)} - \langle L, \mathbf{u}_h(\alpha_h)\rangle_{\alpha_h}$$

in which $\mathbf{u}_h(\alpha_h) \in K_h(\alpha_h)$ is the solution of the discrete state inequality :

$$(\mathscr{P}(\alpha_h))_h\quad (\tau(\mathbf{u}_h), \varepsilon(\mathbf{v}_h - \mathbf{u}_h))_{0,\Omega(\alpha_h)} \geq \langle L, \mathbf{v}_h - \mathbf{u}_h(\alpha_h)\rangle_{\alpha_h} \quad \forall \mathbf{v}_h \in K_h(\alpha_h)\ .$$

Using the classical compactness arguments and (jj) one can easily prove the existence of at least one solution α_h^* of $(\mathbf{P})_h$. Our main goal will be devoted to the study if there is any relation among solutions of (P) and $(\mathbf{P})_h$ if $h \to 0^+$. Before doing this we present some auxiliary results, necessary in what follows.

LEMMA 3.1 : *Let $\alpha_h \rightrightarrows \alpha$ (uniformly) in $[a, b]$ as $h \to 0^+$, $\alpha_h \in \mathscr{U}_{ad}^h$, $\alpha \in \mathscr{U}_{ad}$. Let $\mathbf{w} \in K(\alpha)$ and let $\tilde{\mathbf{w}}$ denote the Calderon extension of $\mathbf{w}$ from $\Omega(\alpha)$ on $\hat{\Omega}$. Then there exists a sequence $\{\mathbf{w}_i\}$, $\mathbf{w}_i \in (H^2(\hat{\Omega}))^2$ (even more regular) such that*

$$\mathbf{w}_i \to \tilde{\mathbf{w}} \text{ in } (H^1(\hat{\Omega}))^2, \quad i \to \infty ; \tag{3.2}$$

$$\text{for any } i \text{ fixed}, \ \mathbf{w}_i|_{\Omega_h} \in K(\alpha_h) \text{ for all } h \leq h_0(i) . \tag{3.3}$$

For the proof see [10].

LEMMA 3.2 : *Let $\alpha_h \in \mathscr{U}_{ad}^h$, $\alpha \in \mathscr{U}_{ad}$ be such that $\alpha_h \rightrightarrows \alpha$ in $[a, b]$ as $h \to 0^+$. Let $\mathbf{u}_h \equiv \mathbf{u}_h(\alpha_h)$ be the solutions of $(\mathscr{P}(\alpha_h))_h$. Then there exists a subsequence $\{\mathbf{u}_{h_j}\} \subset \{\mathbf{u}_h\}$ such that*

$$\mathbf{u}_{h_j}(\alpha_{h_j}) \rightharpoonup \mathbf{u} \text{ (weakly) in } (H^1(G_m(\alpha)))^2 \text{ as } j \to \infty \tag{3.4}$$

for any m integer, where $\mathbf{u} \equiv \mathbf{u}(\alpha) \in K(\alpha)$ is the solution of $(\mathscr{P}(\alpha))$ and

$$G_m(\alpha) = \left\{ (x_1, x_2) \in \mathbb{R}^2 | x_1 \in [a, b], \alpha(x_1) + \frac{1}{m} < x_2 < \gamma \right\} .$$

Proof: Using the fact that the constant in Korn's inequality can be chosen independently on $\alpha \in \mathscr{U}_{ad}$ (see [15, 10]) we see that $\{\mathbf{u}_h\}$ is bounded in the following sense :

$$\exists C > 0 : \|\mathbf{u}_h\|_{1, \Omega_h} \leq C \quad \forall h \in (0, 1) . \tag{3.5}$$

Let m integer be fixed. Then there exists $h_0 = h_0(m)$ such that $\bar{G}_m(\alpha) \subset \Omega_h$ for all $h \leq h_0(m)$. Consequently,

$$\|\mathbf{u}_h\|_{1, G_m(\alpha)} \leq \|\mathbf{u}_h\|_{1, \Omega_h} \leq C \tag{3.6}$$

and one may extract a subsequence $\{\mathbf{u}_{h_1}\} \subset \{\mathbf{u}_h\}$ such that

$$\mathbf{u}_{h_1} \rightharpoonup \mathbf{u}^{(m)} \quad \text{in} \quad (H^1(G_m(\alpha)))^2 ,$$

where $\mathbf{u}^{(m)} \in V(G_m(\alpha)) \equiv \{\mathbf{v} \in (H^1(G_m(\alpha)))^2 | \mathbf{v} = 0 \text{ on } \Gamma_D \cap \partial G_m(\alpha)\}$.

Analogously, there exists $h_0(m+1)$ such that $\bar{G}_m(\alpha) \subset \bar{G}_{m+1}(\alpha) \subset \Omega_h$ for all $h \leq h_0(m+1)$ and a subsequence $\{\mathbf{u}_{h_2}\}$ of $\{\mathbf{u}_{h_1}\}$ can be chosen such that

$$\mathbf{u}_{h_2} \rightharpoonup \mathbf{u}^{(m+1)} \quad \text{in} \quad (H^1(G_{m+1}(\alpha)))^2 .$$

Clearly $\mathbf{u}^{(m+1)} \in V(G_{m+1}(\alpha))$ and $\mathbf{u}^{(m)} \equiv \mathbf{u}^{(m+1)}$ on $G_m(\alpha)$.

Repeating the same procedure for any k integer, we see that there exists $h_0(m+k)$ and a subsequence $\{\mathbf{u}_{h_k}\}$ of $\{\mathbf{u}_{h_{k-1}}\}$ such that

$$\mathbf{u}_{h_k} \rightharpoonup \mathbf{u}^{(m+k)} \quad \text{in} \quad (H^1(G_{m+k}(\alpha)))^2 ,$$

$\bar{G}_{m+k-1}(\alpha) \subset \bar{G}_{m+k}(\alpha) \subset \Omega_h$ for all $h \leq h_0(m+k)$. Moreover, $\mathbf{u}^{(m+k)} = \mathbf{u}^{(m+k-1)}$ on $G_{m+k-1}(\alpha)$ and $\mathbf{u}^{(m+k)} \in V(G_{m+k}(\alpha))$. Denoting by $\{\mathbf{u}_{h_j}^D\}$ the diagonal subsequence defined by $\{\mathbf{u}_{h_j}\}$ we see that

$$\mathbf{u}_{h_j}^D \rightharpoonup \mathbf{u} \quad \text{in} \quad (H^1(G_m(\alpha)))^2 \text{ for any } m , \tag{3.7}$$

where $\mathbf{u}|_{G_m(\alpha)} \equiv \mathbf{u}^{(m)}$. Clearly $\mathbf{u} \in V(\alpha)$. Next, instead of $\{\mathbf{u}_{h_j}^D\}$ we shall write simply $\{\mathbf{u}_{h_j}\}$. Now we prove that $\mathbf{u} \equiv \mathbf{u}(\alpha)$ solves $(\mathscr{P}(\alpha))$. The fact that $\mathbf{u} \in K(\alpha)$ follows from Lemma 5.2 in [9]. It remains to verify that

$$(\tau(\mathbf{u}), \varepsilon(\mathbf{w} - \mathbf{u}))_{0, \Omega(\alpha)} \geq \langle L, \mathbf{w} - \mathbf{u} \rangle_\alpha \quad \forall \mathbf{w} \in K(\alpha) .$$

Let $\mathbf{w} \in K(\alpha)$ be fixed. Accordingly to Lemma 3.1 there exists a sequence $\{\mathbf{w}_i\}$ such that (3.2) and (3.3) are satisfied. Let i be fixed. Then $\mathbf{w}_i|_{\Omega_{h_j}} \in K(\alpha_{h_j}) \cap (H^2(\Omega(\alpha_{h_j})))^2$ for h_j sufficiently small (h_j is a filter of indices, satisfying (3.7)). Let $\mathbf{w}_{ih_j} \equiv \Pi_{h_j} \mathbf{w}_i$ denote the piecewise linear Lagrange interpolate of $\mathbf{w}_i|_{\Omega_{h_j}}$. It is easy to see that $\mathbf{w}_{ih_j} \in K_{h_j}(\alpha_{h_j})$.

Thus

$$(\tau(\mathbf{u}_{h_j}), \varepsilon(\mathbf{w}_{ih_j} - \mathbf{u}_{h_j}))_{0, \Omega_{h_j}} \geq \langle L, \mathbf{w}_{ih_j} - \mathbf{u}_{h_j} \rangle_{\alpha_{h_j}} .$$

Let m (integer) be fixed. Then for h_j sufficiently small :

$$\begin{aligned}
(\tau(\mathbf{u}_{h_j}), \varepsilon(\mathbf{w}_{ih_j} - \mathbf{u}_{h_j}))_{0, \Omega_{h_j}} &= (\tau(\mathbf{u}_{h_j}), \varepsilon(\mathbf{w}_{ih_j} - \mathbf{u}_{h_j}))_{0, G_m(\alpha)} + \\
&\quad + (\tau(\mathbf{u}_{h_j}), \varepsilon(\mathbf{w}_{ih_j} - \mathbf{u}_{h_j}))_{0, \Omega_{h_j} \setminus \Omega(\alpha)} \\
&\quad + (\tau(\mathbf{u}_{h_j}), \varepsilon(\mathbf{w}_{ih_j} - \mathbf{u}_{h_j}))_{0, (\Omega(\alpha) \setminus G_m(\alpha)) \cap \Omega_{h_j}} \\
&\leq (\tau(\mathbf{u}_{h_j}), \varepsilon(\mathbf{w}_{ih_j} - \mathbf{u}_{h_j}))_{0, G_m(\alpha)} \\
&\quad + (\tau(\mathbf{u}_{h_j}), \varepsilon(\mathbf{w}_{ih_j}))_{0, \Omega_{h_j} \setminus \Omega(\alpha)} \\
&\quad + (\tau(\mathbf{u}_{h_j}), \varepsilon(\mathbf{w}_{ih_j}))_{0, (\Omega(\alpha) \setminus G_m(\alpha)) \cap \Omega_{h_j}} .
\end{aligned}$$

Now

$$(3.8)\quad \limsup_{h_j \to 0^+} (\tau(\mathbf{u}_{h_j}), \varepsilon(\mathbf{w}_{ih_j} - \mathbf{u}_{h_j}))_{0, G_m(\alpha)} \leq (\tau(\mathbf{u}), \varepsilon(\mathbf{w}_i - \mathbf{u}))_{0, G_m(\alpha)},$$

taking into account (3.7), (j) and well known approximation properties of the Lagrange interpolate $\mathbf{w}_{ih_j}$. As $\alpha_{h_j} \rightrightarrows \alpha$ in $[a, b]$ and (3.6) holds, we see that

$$(3.9)\quad \lim_{h_j \to 0^+} (\tau(\mathbf{u}_{h_j}), \varepsilon(\mathbf{w}_{ih_j}))_{0, \Omega_{h_j} \setminus \Omega(\alpha)} = 0 .$$

Finally,

$$\limsup_{h_j \to 0^+} (\tau(\mathbf{u}_{h_j}), \varepsilon(\mathbf{w}_{ih_j}))_{0, (\Omega(\alpha) \setminus G_m(\alpha)) \cap \Omega_{h_j}} \leq$$

$$\leq \limsup_{h_j \to 0^+} (\tau(\mathbf{u}_{h_j}), \varepsilon(\mathbf{w}_i))_{0, (\Omega(\alpha) \setminus G_m(\alpha)) \cap \Omega_{h_j}}$$

$$+ \limsup_{h_j \to 0^+} (\tau(\mathbf{u}_{h_j}), \varepsilon(\mathbf{w}_{ih_j} - \mathbf{w}_i))_{0, (\Omega(\alpha) \setminus G_m(\alpha)) \cap \Omega_{h_j}}$$

$$\leq C \| \mathbf{w}_i \|_{1, \Omega(\alpha) \setminus G_m(\alpha)},$$

where $C > 0$ doesn't depend on m.

From this, (3.8) and (3.9) it follows

$$(3.10)\quad \limsup_{h_j \to 0^+} (\tau(\mathbf{u}_{h_j}), \varepsilon(\mathbf{w}_{ih_j} - \mathbf{u}_{h_j}))_{0, \Omega_{h_j}} \leq$$

$$\leq (\tau(\mathbf{u}), \varepsilon(\mathbf{w}_i - \mathbf{u}))_{0, G_m(\alpha)} + C \| \mathbf{w}_i \|_{1, \Omega(\alpha) \setminus G_m(\alpha)} .$$

Analogously

$$(\mathbf{F}, \mathbf{w}_{ih_j} - \mathbf{u}_{h_j})_{0, \Omega_{h_j}} = (\mathbf{F}, \mathbf{w}_{ih_j} - \mathbf{u}_{h_j})_{0, G_m(\alpha)} +$$

$$+ (\mathbf{F}, \mathbf{w}_{ih_j} - \mathbf{u}_{h_j})_{0, \Omega_{h_j} \setminus \Omega(\alpha)} + (\mathbf{F}, \mathbf{w}_{ih_j} - \mathbf{u}_{h_j})_{0, (\Omega(\alpha) \setminus G_m(\alpha)) \cap \Omega_{h_j}} .$$

Hence

$$(3.11)\quad \liminf_{h_j \to 0^+} (\mathbf{F}, \mathbf{w}_{ih_j} - \mathbf{u}_{h_j})_{0, \Omega_{h_j}} \geq (\mathbf{F}, \mathbf{w}_i - \mathbf{u})_{0, G_m(\alpha)} -$$

$$- C \left\{ \| \mathbf{F} \|_{0, \Omega(\alpha) \setminus G_m(\alpha)} + \| \mathbf{w}_i \|_{0, \Omega(\alpha) \setminus G_m(\alpha)} \right\},$$

where $C > 0$ doesn't depend on m. Finally

$$(\mathbf{P}, \mathbf{w}_{ih_j} - \mathbf{u}_{h_j})_{0, \Gamma_P} = (\mathbf{P}, \mathbf{w}_{ih_j} - \mathbf{u}_{h_j})_{0, \Gamma_P \setminus M_m} + (\mathbf{P}, \mathbf{w}_{ih_j} - \mathbf{u}_{h_j})_{0, M_m},$$

where

$$M_m = \left\{ (x_1, x_2) \in \mathbb{R}_2 \,|\, x_2 \in \left(\alpha(a), \alpha(a) + \frac{1}{m} \right) \text{ or } x_2 \in \left(\alpha(b), \alpha(b) + \frac{1}{m} \right) \right\}$$

(this consideration can be omitted if $\operatorname{dist}(\Gamma_P, \Gamma_C(\alpha)) > 0$). Then

$$\liminf_{h_j \to 0^+} (\mathbf{P}, \mathbf{w}_{ih_j} - \mathbf{u}_{h_j})_{0, \Gamma_P} \geq (\mathbf{P}, \mathbf{w}_i - \mathbf{u})_{0, \Gamma_P \setminus M_m} - C (\| \mathbf{P} \|_{0, M_m} + \| \mathbf{w}_i \|_{0, M_m})$$

with a constant C, which doesn't depend on m. Here we use the fact that the norm of the trace mapping $\gamma : H^1(\Omega_{h_j}) \to L^2(\partial \Omega_{h_j} \setminus \Gamma_C(\alpha_h))$ can be estimated independently on h_j. From this, (3.10) and (3.11) we see that

$$(\tau(\mathbf{u}), \varepsilon(\mathbf{w}_i - \mathbf{u}))_{0, G_m(\alpha)} + C \| \mathbf{w}_i \|_{1, \Omega(\alpha) \setminus G_m(\alpha)} \geq (\mathbf{F}, \mathbf{w}_i - \mathbf{u})_{0, G_m(\alpha)} +$$

$$+ (\mathbf{P}, \mathbf{w}_i - \mathbf{u})_{0, \Gamma_P \setminus M_m} - C \left\{ \| \mathbf{F} \|_{0, \Omega(\alpha) \setminus G_m(\alpha)} + \| \mathbf{w}_i \|_{0, \Omega(\alpha) \setminus G_m(\alpha)} \right\}$$

$$- C \left\{ \| \mathbf{P} \|_{0, M_m} + \| \mathbf{w}_i \|_{0, M_m} \right\} .$$

Passing to the limit with $m \to \infty$ we are led to

$$(\tau(\mathbf{u}), \varepsilon(\mathbf{w}_i - \mathbf{u}))_{0, \Omega(\alpha)} \geq \langle L, \mathbf{w}_i - \mathbf{u} \rangle_\alpha .$$

Finally, letting $i \to \infty$ we obtain

$$(\tau(\mathbf{u}), \varepsilon(\mathbf{w} - \mathbf{u}))_{0, \Omega(\alpha)} \geq \langle L, \mathbf{w} - \mathbf{u} \rangle_\alpha \quad \forall \mathbf{w} \in K(\alpha),$$

i.e. $\mathbf{u}$ solves $\mathscr{P}(\alpha)$. ■

The main result of this Section is

THEOREM 3.1 : *Let $\alpha_h^* \in \mathscr{U}_{ad}^h$ be a solution of $(\mathbf{P})_h$ and let $\mathbf{u}_h(\alpha_h^*)$ be the corresponding solution of the state problem $(\mathscr{P}(\alpha_h^*))_h$. Then there exist a subsequence $\{\alpha_{h_j}^*\}$ of $\{\alpha_h^*\}$, an element $\alpha^* \in \mathscr{U}_{ad}$ and $\mathbf{u}(\alpha^*) \in K(\alpha^*)$ such that*

$$(3.12)\quad \alpha_{h_j}^* \rightrightarrows \alpha^* \quad in \quad [a, b],$$

$$(3.13)\quad \mathbf{u}_{h_j}(\alpha_{h_j}^*) \rightharpoonup \mathbf{u}(\alpha^*) \quad in \quad (H^1(G_m(\alpha^*)))^2, \quad j \to \infty,$$

for any m integer. Moreover α^* is a solution of $(\mathbf{P})$ and $\mathbf{u}(\alpha^*)$ is the corresponding state on $\Omega(\alpha^*)$.

Proof: As $\mathscr{U}_{ad}^h \subset \mathscr{U}_{ad}$ for all h and $\mathscr{U}_{ad}$ is compact in $C^0([a, b]) -$

topology, there exist a subsequence of $\{\alpha_h^*\}$ (denoted by $\{\alpha_h^*\}$ again) and $\alpha^* \in \mathscr{U}_{ad}$ such that

$$\alpha_h^* \rightrightarrows \alpha \quad \text{in} \quad [a, b], \quad h \to 0. \tag{3.14}$$

Accordingly to Lemma 3.2, a subsequence $\{\mathbf{u}_{h_j}(\alpha_{h_j}^*)\}$ of $\{\mathbf{u}_h(\alpha_h^*)\}$ and an element $\mathbf{u}(\alpha^*) \in K(\alpha^*)$ exist and

$$\mathbf{u}_{h_j}(\alpha_{h_j}^*) \rightharpoonup \mathbf{u}(\alpha^*) \quad \text{in} \quad (H^1(G_m(\alpha^*)))^2 \tag{3.15}$$

for any m. Moreover, $\mathbf{u}(\alpha^*)$ solves $(\mathscr{P}(\alpha^*))$.

To complete the proof of Theorem 3.1 it remains to show that α^* is a minimizer of E over $\mathscr{U}_{ad}$. One can write

$$E_{h_j}(\alpha_{h_j}^*) = E_{h_j, G_m(\alpha^*)}(\alpha_{h_j}^*) + E_{h_j, \Omega_{h_j} \setminus G_m(\alpha^*)}(\alpha_{h_j}^*),$$

provided h_j is sufficiently small, where

$$E_{h_j, G_m(\alpha^*)}(\alpha_{h_j}^*) = \frac{1}{2}(\tau(\mathbf{u}_{h_j}(\alpha_{h_j}^*)), \varepsilon(\mathbf{u}_{h_j}(\alpha_{h_j}^*)))_{0, G_m(\alpha^*)} - (\mathbf{F}, \mathbf{u}_{h_j}(\alpha_{h_j}^*))_{0, G_m(\alpha^*)} - (\mathbf{P}, \mathbf{u}_{h_j}(\alpha_{h_j}^*))_{0, \Gamma_P \setminus M_m},$$

$$E_{h_j, \Omega_{h_j} \setminus G_m(\alpha^*)}(\alpha_{h_j}^*) = \frac{1}{2}(\tau(\mathbf{u}_{h_j}(\alpha_{h_j}^*)), \varepsilon(\mathbf{u}_{h_j}(\alpha_{h_j}^*)))_{0, \Omega_{h_j} \setminus G_m(\alpha^*)} - (\mathbf{F}, \mathbf{u}_{h_j}(\alpha_{h_j}^*))_{0, \Omega_{h_j} \setminus G_m(\alpha^*)} - (\mathbf{P}, \mathbf{u}_{h_j}(\alpha_{h_j}^*))_{0, M_m}.$$

Let m, be fixed and $h_j \to 0^+$. Then

$$\varliminf_{h_j \to 0^+} E_{h_j}(\alpha_{h_j}^*)(\alpha_{h_j}^*) \geq \varliminf_{h_j \to 0^+} E_{h_j, G_m(\alpha^*)}(\alpha_{h_j}^*) + \varliminf_{h_j \to 0^+} E_{h_j, \Omega_{h_j} \setminus G_m(\alpha^*)}(\alpha_{h_j}^*).$$

As (3.14) and (3.15) hold, we have

$$\varliminf_{h_j \to 0^+} E_{h_j, G_m(\alpha^*)}(\alpha_{h_j}^*) \geq \frac{1}{2}(\tau(\mathbf{u}(\alpha^*)), \varepsilon(\mathbf{u}(\alpha^*)))_{0, G_m(\alpha^*)} - (\mathbf{F}, \mathbf{u}(\alpha^*))_{0, G_m(\alpha^*)} - (\mathbf{P}, \mathbf{u}(\alpha^*))_{0, \Gamma_P \setminus M_m} \equiv E_{G_m(\alpha^*)}(\alpha^*)$$

and

$$\varliminf_{h_j \to 0^+} E_{h_j, \Omega_{h_j} \setminus G_m(\alpha^*)}(\alpha_{h_j}^*) \geq -c(\|\mathbf{F}\|_{0, \Omega(\alpha^*) \setminus G_m(\alpha^*)} + \|\mathbf{P}\|_{0, M_m}),$$

with a constant c, which doesn't depend on m. Passing to the limit with $m \to \infty$ we see that

$$\varliminf_{h_j \to 0^+} E_{h_j}(\alpha_{h_j}^*) \geq E(\alpha^*). \tag{3.16}$$

Let $\hat{\alpha} \in \mathscr{U}_{ad}$ be an arbitrary and let $\hat{\alpha}_h \in \mathscr{U}_{ad}^h$ be a sequence such that

$$\hat{\alpha}_h \rightrightarrows \hat{\alpha} \quad \text{in} \quad [a, b], \quad h \to 0^+. \tag{3.17}$$

The existence of such a sequence has been proved in [2]. Let $\mathbf{u}(\hat{\alpha}) \in K(\hat{\alpha})$, $\mathbf{u}_h(\hat{\alpha}_h) \in K_h(\hat{\alpha}_h)$ denote solutions of $(\mathscr{P}(\hat{\alpha}))$, $(\mathscr{P}(\hat{\alpha}_h))_h$, respectively. If $h_j \to 0^+$ denote a filter of indices, for which (3.16) is true, then

$$\varliminf_{h_j \to 0^+} E_{h_j}(\alpha_{h_j}^*) \leq \varliminf_{h_j \to 0^+} E_{h_j}(\hat{\alpha}_{h_j}), \tag{3.18}$$

as follows from the definition of $(\mathbf{P})_h$. As $\mathbf{u}(\hat{\alpha}) \in K(\hat{\alpha})$, there exists a subsequence of $\{h_j\}$ (which will be denoted by $\{h_j\}$ as well) and elements $\hat{\mathbf{v}}_{h_j} \in K_{h_j}(\hat{\alpha}_{h_j})$ such that

$$\|\hat{\mathbf{v}}_{h_j} - \tilde{\mathbf{u}}(\hat{\alpha})\|_{1, \Omega_{h_j}(\hat{\alpha}_{h_j})} \to 0, \quad h_j \to 0^+, \tag{3.19}$$

where $\tilde{\mathbf{u}}(\hat{\alpha})$ denotes the Calderon extension of $\mathbf{u}(\hat{\alpha})$ from $\Omega(\hat{\alpha})$ on $\hat{\Omega}$ (see the proof of Lemma 3.2, especially the construction of functions $\mathbf{w}_{ih_j}$). An equivalent form of $(\mathscr{P}(\hat{\alpha}_{h_j}))_{h_j}$ says that

$$E_{h_j}(\hat{\alpha}_{h_j}) \leq J_{\hat{\alpha}_{h_j}}(\mathbf{v}_{h_j}), \quad \forall \mathbf{v}_{h_j} \in K_{h_j}(\hat{\alpha}_{h_j}), \tag{3.20}$$

where $J_{\hat{\alpha}_{h_j}}(\mathbf{v}_{h_j})$ denotes the value of the total potential energy functional at $\mathbf{v}_{h_j}$, calculated over $\Omega_{h_j}(\hat{\alpha}_{h_j})$, i.e.

$$J_{\hat{\alpha}_h}(\mathbf{v}) = \frac{1}{2}(\tau(\mathbf{v}), \varepsilon(\mathbf{v}))_{0, \Omega_h(\hat{\alpha}_h)} - \langle L, \mathbf{v} \rangle_{\hat{\alpha}_h}.$$

As a consequence of (3.17) and (3.19) we have

$$\varliminf_{h_j \to 0^+} J_{\hat{\alpha}_{h_j}}(\mathbf{v}_{h_j}) = J_{\hat{\alpha}}(\mathbf{u}(\hat{\alpha})) = E(\hat{\alpha}).$$

Comparing this with (3.16), (3.19) and (3.20) we see that

$$E(\alpha^*) \leq E(\hat{\alpha}) \quad \forall \hat{\alpha} \in \mathscr{U}_{ad}. \quad \blacksquare$$

4. NUMERICAL REALIZATION

Let us write $\bar{\Omega}_h(\alpha_h) = \bar{\hat{\Omega}}' \cup \overline{\Omega_h'(\alpha_h)}$, where $\hat{\Omega}' = (a, b) \times (C_0', \gamma)$ with $C_0' > C_0$, is a part of $\Omega_h(\alpha_h)$, where the contact part $\Gamma_C(\alpha_h)$, $\alpha_h \in \mathscr{U}_{ad}^h$ cannot penetrate (see *Fig.* 4.1).

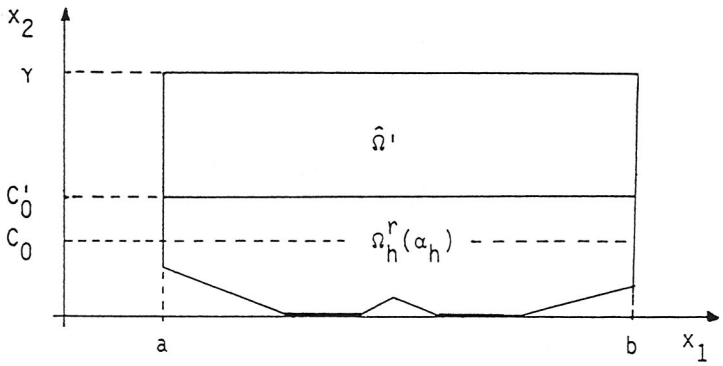

Figure 4.1.

Let $\hat{\mathcal{J}}_h$ and $\mathcal{J}_h^r(\alpha_h)$, resp. be a triangulation of $\bar{\hat{\Omega}}'$ and $\bar{\Omega}_h^r(\alpha_h)$, resp. $\mathcal{J}_h^r(\alpha_h)$ will be constructed partially by means of principle moving points

$$(4.1)\quad A_i = (a_i, x_2^i)\,, \quad a_i = a + ih\,, \quad h = \frac{b-a}{N}\,, \quad x_2^i = \alpha_h(a_i)\,, \quad i = 0, \ldots, N\,,$$

partially by means of associated moving points

$$A_i^j = (a_i, \varphi_i^j(x_2^i))$$

and fixed points

$$\hat{A}_i = (a_i, C_0') \quad (\text{see } Fig.\ 4.2)\,.$$

We see that the principle and associated moving points are allowed to move in x_2-direction only. The x_2-coordinate of associated moving points

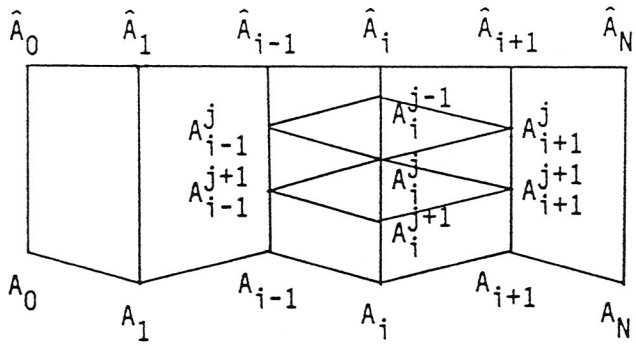

Figure 4.2.

A_i^j will be derived from that of A_i by means of a function φ_i^j. Our choice is linear, i.e.

$$(4.2)\qquad \varphi_i^j = C_0' + \frac{x_2^i - C_0'}{M} j\,, \quad M \text{ integer}, j = 0, \ldots, M\,.$$

Triangulation $\hat{\mathcal{J}}_h$ of the fixed part $\bar{\hat{\Omega}}'$ will be the same for all $\alpha_h \in \mathcal{U}_{ad}^h$. Consequently, any triangulation of $\Omega_h(\alpha_h)$ is uniquely determined by $(N+1)$ x_2-coordinates of principle moving points A_i. Let us denote

$$X \equiv (x_2^0, x_2^1, \ldots, x_2^N) \equiv (\alpha_h(a_0), \alpha_h(a_1), \ldots, \alpha_h(a_N))$$

and $\Omega(X) \equiv \Omega_h(\alpha_h)$, $\mathbf{u}_h(X) \equiv \mathbf{u}(\alpha_h)$, $\alpha_h \in \mathcal{U}_{ad}^h$, $\Gamma_C(X) \equiv \Gamma_C(\alpha_h)$.

For fixed $\Omega(X)$, $\mathbf{u}_h(X)$ is given by nodal displacement vector $Q(X) \in \mathcal{K}(X)$, which is the solution of the problem:

$$(4.3)\qquad \mathcal{J}(Q(X)) \le \mathcal{J}(Q) \quad \forall Q \in \mathcal{K}(X)\,,$$

where

$$\mathcal{J}(Q) = \frac{1}{2} Q^T A(X) Q - \mathcal{F}^T(X) Q - \mathcal{P}^T(X) Q$$

and

$$\mathcal{K}(X) = \left\{ Q \in \mathbb{R}^n \,|\, Q_{j_i} \ge -\alpha_h(a_i) \quad \forall j_i \in I \right\}.$$

$A(X)$ is the stiffness matrix of our problem, $\mathcal{F}(X)$, $\mathcal{P}(X)$ is the vector arising from the discretization of the body force $\mathbf{F}$ and the surface traction $\mathbf{P}$, respectively. Dependence of A, $\mathcal{F}$ and $\mathcal{P}$ on design variables X is emphasized by writing X as a argument. I is the set, containing all indices of x_2-components of the nodal displacement field at A_i, $i = 0, \ldots, N$. The state problem (4.3) can be solved by different iterative methods (SOR with projection, conjugate gradients with preconditioning, multigrid method). For comparison of these methods for solving (4.3) see [19].

Consequently, the problem $(\mathbf{P})_h$ expressed in algebraic form is equivalent to

$$(\mathbf{P}(X)) \quad \min_{X \in \mathcal{D}} E(Q(X), X)\,,$$

where $Q(X)$ solves (4.3) and $\mathcal{D}$ denotes the *set of admissible design nodes* given by

$$(4.4)\quad \mathcal{D} = \Big\{ X \in \mathbb{R}^{N+1}\,;\, 0 \le x_2^i \le C_0 \quad \forall i = 0, \ldots, N\,;$$
$$-\frac{C_1}{N} \le x_2^i - x_2^{i-1} \le \frac{C_1}{N} \quad i = 1, \ldots, N\,; \quad \sum_{i=1}^{N} \left(\gamma - \frac{x_2^{i-1} + x_2^i}{2} h = C_2 \right) \Big\}$$

and

$$E(X) \equiv E(Q(X), X) = \frac{1}{2}(Q(X), A(X)\,Q(X)) - \\ - (\mathscr{F}(X), Q(X)) - (\mathscr{P}(X), Q(X)) .$$

Let $X \in \mathscr{D}$ and $V \in \mathbb{R}^{N+1}$ be given. We denote by

$$A'(X) \equiv A'(X)\,V = \lim_{t \to 0^+} \frac{A(X+tV) - A(X)}{t}$$

$$\mathscr{F}'(X) \equiv \mathscr{F}'(X)\,V = \lim_{t \to 0^+} \frac{\mathscr{F}(X+tV) - \mathscr{F}(X)}{t}$$

$$\mathscr{P}'(X) \equiv \mathscr{P}'(X)\,V = \lim_{t \to 0^+} \frac{\mathscr{P}(X+tV) - \mathscr{P}(X)}{t}$$

the directional derivatives of A, $\mathscr{F}$, $\mathscr{P}$ at point X in the direction V. It is easy to see that the mappings $X \to A(X)$, $\mathscr{F}(X)$, $\mathscr{P}(X)$ are even continuously differentiable. On the other hand, the mapping $X \to Q(X)$ is *only directionally differentiable* but not continuously differentiable (cf. examples in [14, 17, 18, 20, 21]). Consequently, the mapping $X \to E(X)$ is not, in general, of the class C^1. Next we show however that our concrete choice of E leads to a differentiable case. Indeed, let $E'(X)\,V$ denote the directional derivative of E at X in the direction V.

Then

$$E'(X)\,V = (Q'(X), A(X)\,Q(X) - \mathscr{F}(X) - \mathscr{P}(X)) \\ - (\mathscr{P}'(X), Q(X)) - (\mathscr{F}'(X), Q(X)) \\ + \frac{1}{2}(Q(X), A'(X)\,Q(X)) . \tag{4.5}$$

We shall eliminate Q' from (4.5). Components T_i, $i \in I$ of the residual vector

$$T(X) \equiv A(X)\,Q(X) - \mathscr{F}(X) - \mathscr{P}(X) \tag{4.6}$$

are discrete analogues of the normal stresses on $\Gamma_C(\alpha)$. If $T_j(X) \neq 0$ for some $j = 0, \ldots, N$, then $T_j(X+tV) \neq 0$ for any $t > 0$ sufficiently small. This means that the corresponding node on $\Gamma_C(X)$ remains in contact regardless small perturbations of $\Omega(X)$:

$$Q_j(X+tV) = -x_2^j - tV_j .$$

Consequently,

$$\frac{\partial Q_j}{\partial x_i} = -\delta_{ij} \tag{4.7}$$

(instead of x_2^j we write simply x_j). Now (4.6) and (4.7) yield :

$$\frac{\partial}{\partial x_i} E(Q(X), X) = -T_i - \left(\frac{\partial}{\partial x_i}\mathscr{F}(X), Q(X)\right) - \\ - \left(\frac{\partial}{\partial x_i}\mathscr{P}(X), Q(X)\right) + \frac{1}{2}\left(Q(X), \left(\frac{\partial}{\partial x_i}A(X)\right)Q(X)\right) . \tag{4.8}$$

Let us repeat that (4.8) holds because of the special form of the cost functional (see also [4]).

Hence $(\mathbf{P}(X))$ represents a *non-convex* but *smooth minimization* problem for variables, subject to box constraints, to linear inequality constraints and to one linear equality constraint. One possible approach to solve $(\mathbf{P})$ is to use the following steepest descent type algorithm :

ALGORITHM 4.1

STEP 0 *Give some feasible initial guess* $X^{(0)} \in \mathscr{D}$. *Set* $k = 0$.

STEP 1 *Compute the state* $Q(X^{(k)})$ *from* (4.3).

STEP 2 *Compute* $E(Q(X^{(k)}), X^{(k)})$ *and*

$$G^{(k)} = \nabla_x E(Q(X^{(k)}), X^{(k)}) .$$

STEP 3 *Find a feasible direction of descent (for example the projection of* $-G^{(k)}$ *on the set* $\mathscr{D}$*).*

STEP 4 *Find* $X^{(k+1)} \in \mathscr{D}$ *such that*

$$E(Q(X^{(k+1)}), X^{(k+1)}) < E(Q(X^{(k)}), X^{(k)}) .$$

Perform the terminal check. If necessary, set $k := k+1$ *and go to* STEP 1.

Now we give some remarks concerning the algorithm 4.1. The number of iterations depends on the choice of the optimization procedure in STEP 4. When the state problem (4.3) is solved iteratively (by SOR method for example) a reasonable initial guess $Q^0(X^{(k)})$ is the solution $Q(X^{(k-1)})$ attained in the previous step. Namely, when the domain $\Omega(X^{(k-1)})$ is replaced by a new domain $\Omega(X^{(k)})$, the corresponding change in the solution of the state problem will probably be small.

When choosing the gradient method in steps 3 and 4 of our algorithm, the following features of the problem have to be taken into account :

i) the evaluation of the cost function and its gradient are time consuming ;

ii) E is of the class C^1 ;

iii) constraints are linear, containing box constraints, inequality constraints and one equality constraint ;

iv) function $X \to E(X)$ is not convex. Consequently, a stationary point in the above algorithm may give only a local minimum. Hence, the initial guess plays an important role in the minimization procedure.

5. NUMERICAL EXAMPLES

In numerical tests we suppose that the elastic body consists of homogeneous and isotropic material with the Poisson ratio $\nu = 0.29$ and the Young modulus

$$E = 2.15 \,.\, 10^{11}\ \mathrm{Nm}^{-2}\,.$$

Example 5.1 : We have chosen in the Definition (2.1) of $\mathscr{U}_{ad}$ the parameters as follows : $a = 0$, $b = 4$, $C_0 = 0.05$, $\gamma = 1$, $C_1 = 0.025$ and $C_2 = 3.91$. Let

$$\Gamma_C(\alpha^0) = \{(x_1, x_2) \in \mathbb{R}^2 \,|\, (x_1 - 4)^2 + (x_2 - R_1)^2 = R_1^2,\ 0 \le x_1 \le 4\}$$

$$\Gamma_D = \{(x_1, x_2) \in \mathbb{R}^2 \,|\, x_1 = 0,\ 0 \le x_2 \le 1\}$$

where $R_1 = 160.025$, see Figure 5.1.

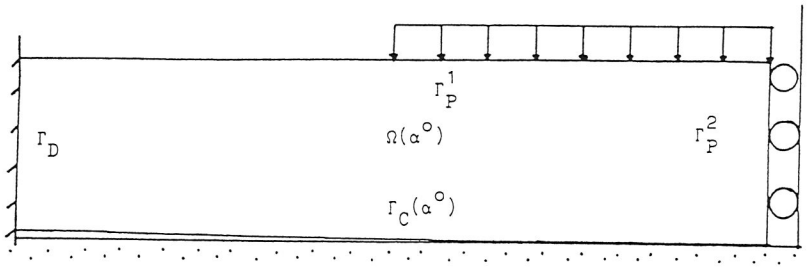

Figure 5.1. — $\Omega(\alpha^0)$ and partition of $\partial\Omega(\alpha^0)$.

We suppose that $\mathbf{F} \equiv 0$, $u_1 = 0$ and $T_2 = 0$ on Γ_P^2 and on Γ_P^1 $\mathbf{P} = (0, P_2)$ where $P_2 = -5.75 \,.\, 10^8$ if $x_1 \in (2, 4)$ and 0 elsewhere.

In Figure 5.2*a* we see the triangulation of $\Omega(\alpha^0)$. It consists of 128 triangles. Consequently, on $\Gamma_C(\alpha^0)$ we have 17 nodes, i.e. we have 17 degrees of freedom in minimization. The state problem is solved by a variant of conjugate gradient method (CG-SSOR with projection, [19]). For the minimization of E the NPSOL routine of SOL (System Optimization Laboratory, [5]) was applied. It is based on augmented Lagrangian method together with linearization of constraints. The gradient, necessary for the method, is computed by the formula (4.8). The computations have been carried out by VAX 11/780 with FPA in single precision. The authors are

indebted to A. Kaarna and T. Tiihonen for their assistance in numerical tests.

In Figure 5.2 we see the results :

a) triangulation of the initial domain $\Omega(\alpha^0)$,
b) $\Omega(\alpha^0)$ after deformation,
c) scaled displacement field (u_1, u_2) at nodal points,
d) diminution of E_h *versus* iteration,
e) triangulation of final $\Omega(\alpha^{10})$,
f) $\Omega(\alpha^{10})$ after deformation,
g) scaled displacement field (u_1, u_2) at nodal points,
h) value of normal components of the stress vector $\rightarrow\!\!\triangleright\!\!\rightarrow$ for the initial shape, $\leftarrow\!\!\triangleleft\!\!\leftarrow$ for the final shape.

Example 5.2 : As in Example 5.1, but

$$\Gamma_C(\alpha^0) = \{(x_1, x_2) \in \mathbb{R}^2 \,|\, x_2 = 0.05 \,.\, x_1,\ 0 \le x_1 \le 4\}\ ,$$

see Figure 5.3.

The solution strategy (triangulations, algorithms, gradients etc.) is the same as in Example 5.1. In Figure 5.4 we see the analogous results to Figure 5.2.

In both test examples the value of the cost functional is reduced roughly speaking to the same value. The initial shape in Examples 5.1 and 5.2 are much different but the Algorithm gives in both cases the same final shape. As a by product we could find for $\Gamma_C(\alpha)$ such a shape that the contact part is enlarged and moreover the contact stress will be evenly distributed. This is of a great practical importance for designers. From the mathematical point of view the functional E is easy to handle whereas the direct minimization of the contact stress is more involved.

More many-sided collection of numerical tests together with the case with a given friction will be presented in a forthcoming paper.

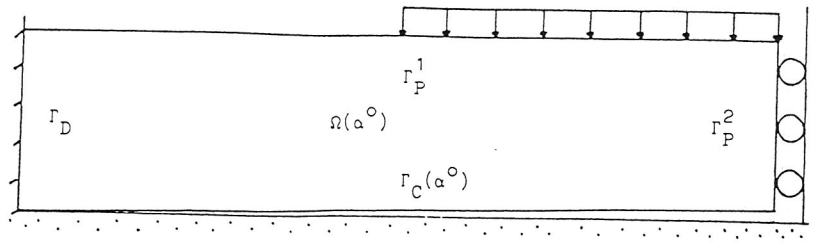

Figure 5.3. — $\Omega(\alpha^0)$ and partition of $\partial\Omega(\alpha^0)$.

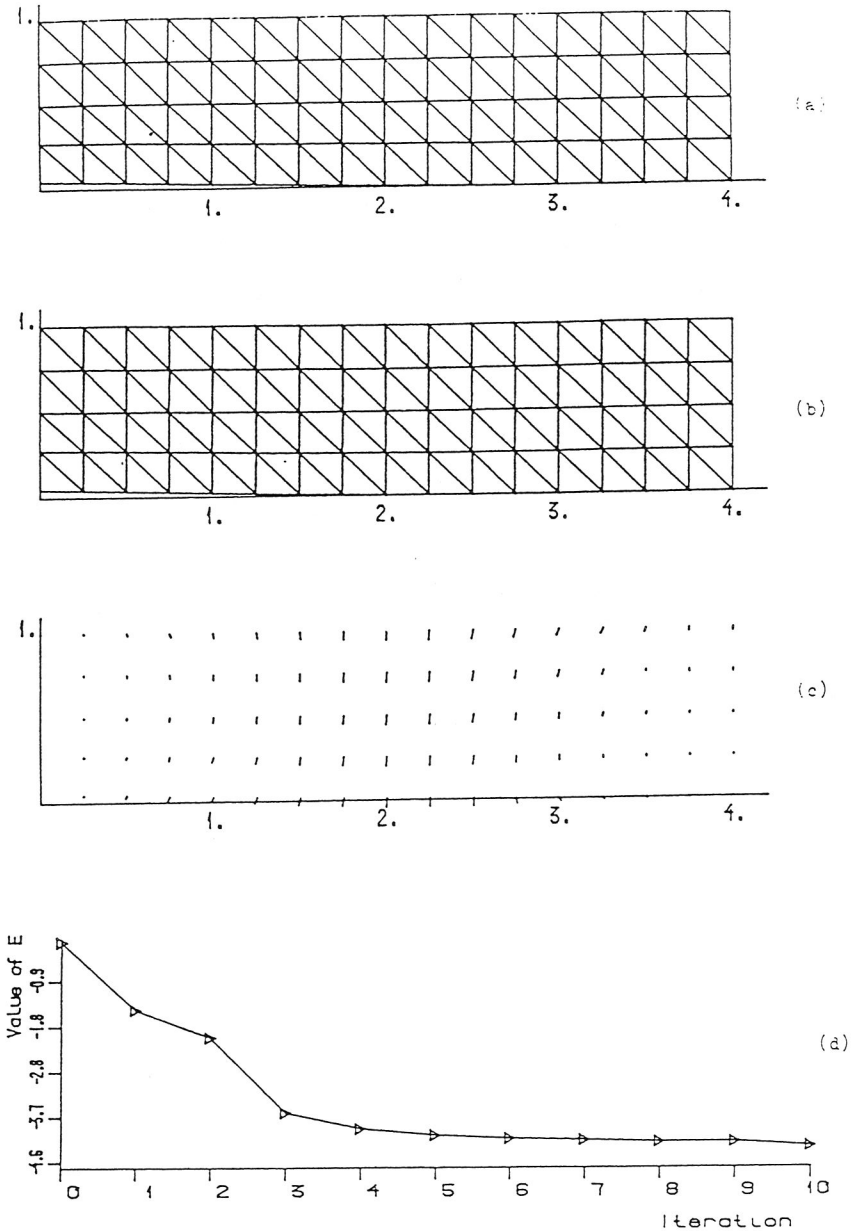

Figure 5.2. — Numerical results for Example 5.1.

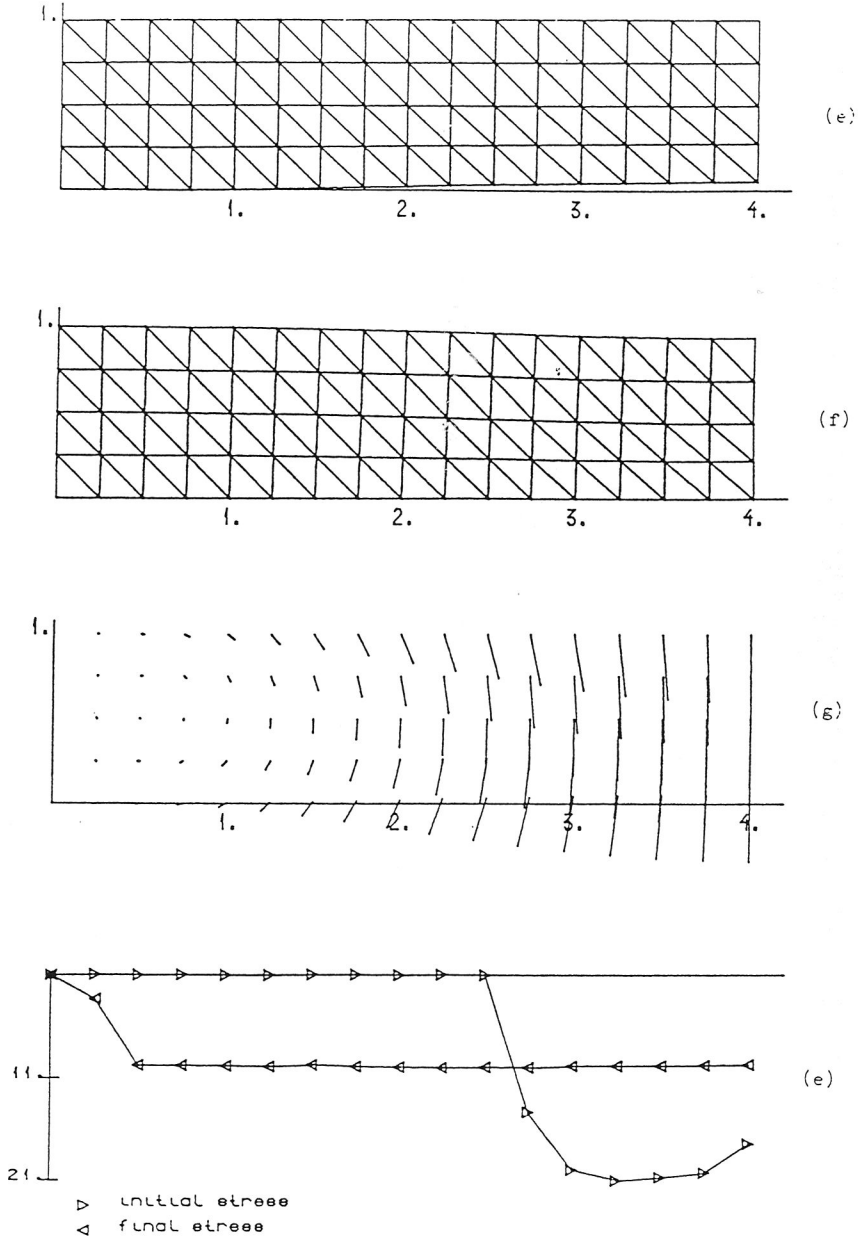

Figure 5.2 *continued*

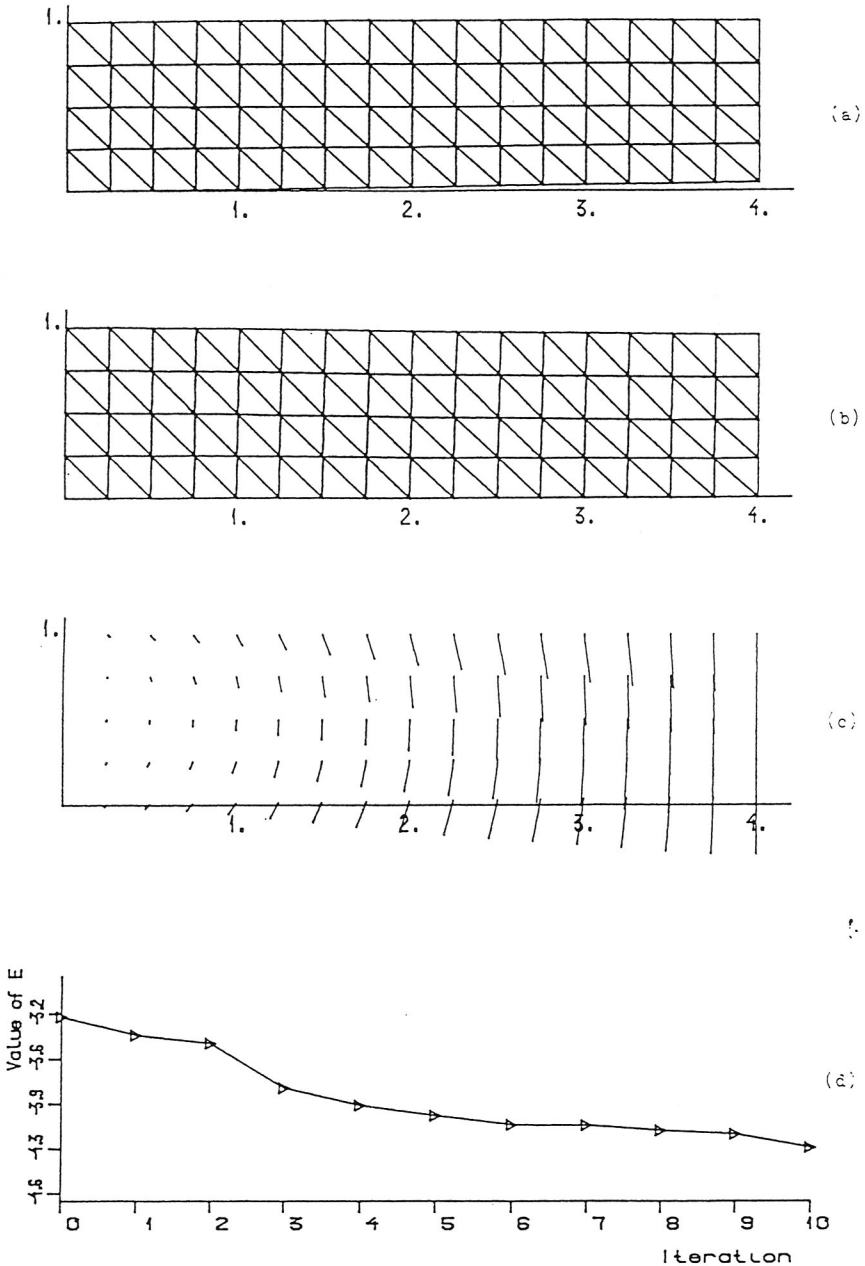

Figure 5.4. — Numerical results for Example 5.2.

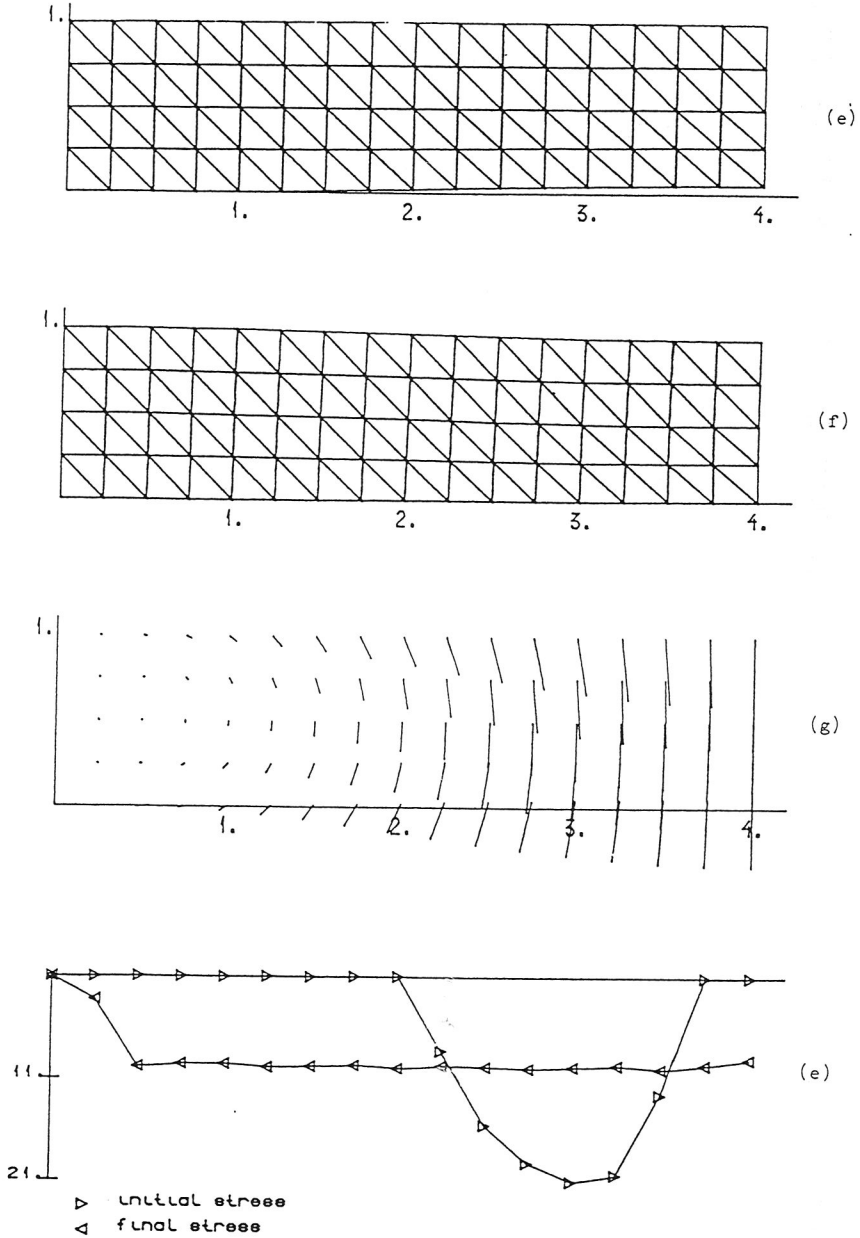

Figure 5.4 *continued*

REFERENCES

[1] E. ATREK, R. H. GALLAGHER, K. M. RAGSDELL and O. C. ZIENKIEWICZ (eds.), *New Directions in Optimum Structural Design,* John Wiley and Sons, Chichester, 1984.

[2] D. BEGIS and R. GLOWINSKI, *Application de la méthode des éléments finis à l'approximation d'un problème de domaine optimal,* Appl. Math. Optim., 2 (1975) pp. 130-169.

[3] P. G. CIARLET, *The Finite Element Method for Elliptic Problems,* Amsterdam-New York-Oxford, North Holland, 1978.

[4] R. CORREA and A. SEEGER, *Directional derivatives in minimax problems,* Numer. Funct. Anal. and Optimiz. 7 (1984) pp. 145-156.

[5] P. E. GILL, W. MURRAY and M. H. WRIGHT, *Practical Optimization,* Academic Press, London, 1981.

[6] J. HASLINGER, V. HORAK and P. NEITTAANMÄKI, *Shape optimization in contact problem with friction* 8 (1985/86), pp. 557-587.

[7] J. HASLINGER and P. NEITTAANMÄKI, *Penalty method in design of system governed by mixed Dirichlet-Signorini boundary value problem,* Ann. Fac. Sci. Toulouse, Vol. V (1983) pp. 199-216.

[8] J. HASLINGER and P. NEITTAANMÄKI, *On optimal shape design of systems governed by mixed Dirichlet-Signorini boundary value problem,* Math. Meth. Appl. Sci. 8 (1985) pp. 157-181.

[9] J. HASLINGER and P. NEITTAANMÄKI, *On the existence of optimal shapes in contact problems,* Numer. Funct. Anal. and Optimiz., 7 (1984) pp. 107-124.

[10] J. HASLINGER, P. NEITTAANMÄKI and T. TIIHONEN, *Shape optimization of an elastic body in contact based on penalization of the state,* Apl. Mat., 31 (1986), pp. 54-77.

[11] E. J. HAUG and J. CEA (eds.), *Optimization of Distributed Parameter Structures. Nato Advanced Study Institutes Series,* Series E, Alphen aan den Rijn : Sijthoff and Noordhoff, 1981.

[12] I. HLAVACEK, J. HASLINGER, J. NECAS and J. LOVISEK, *Numerical Solution of Variational Inequalities* (in Slovak), ALFA, SNTL, 1982 English Translation (to appear).

[13] V. KOMKOV (ed.), *Sensitivity of Functionals with Applications to Engineering Sciences,* Lecture Notes in Mathematics 1086, Springer-Verlag, Berlin, 1984.

[14] P. NEITTAANMÄKI and T. TIIHONEN, *Sensitivity analysis for a class of optimal shape design problems,* University of Jyväskylä, Department of Mathematics, Report 29, 1985.

[15] J. A. NITSCHE, *On Korn's second inequality,* R.A.I.R.O., Analyse numérique, 15 (1981) pp. 237-248.

[16] O. PIRONNEAU, *Optimal Shape Design For Elliptic Systems,* Springer Series in Comput. Physics, Springer-Verlag, New York, 1984.

[17] J. SOKOLOWSKI, *Sensitivity analysis for a class of variational inequalities,* in [11] pp. 1600-1609.

[18] J. SOKOLOWSKI and J. P. ZOLESIO, *Shape sensitivity analysis for variational inequalities,* Proceedings of 10th IFIP Conference, pp. 399-407, LN in Control and Information Sciences 38, Springer-Verlag, Berlin, 1982.

[19] T. TIIHONEN, *Some remarks on solving numerically contact problems in elasticity,* in Proc of the Summer School in Numerical Analysis at Jyväskylä (ed. P. Neittaanmäki), pp. 309-317, University of Jyväskylä, Dept. Math., Report 31, 1985.

[20] J. P. ZOLESIO, *The Material derivative (or speed) method for shape optimization,* in [9] pp. 1089-1151.

[21] J. P. ZOLESIO, *Shape controlability for free boundaries,* in Proc. of 11th IFIP Conference on System Modelling and Control Theory (ed. P. Thoft-Christensen), LN in Control and Information Sciences 59, Springer-Verlag, Berlin, 1984.