Jyväskylän yliopiston julkaisuarkisto
Jyväskylä University Digital Archive

UNIVERSITY OF JYVÄSKYLÄ

This is an electronic reprint of the original article.
This reprint *may differ* from the original in pagination and typographic detail.

Author(s): Varis, Tuomo; Tuovinen, Tero

Title: Open benchmark database for multidisciplinary optimization problems

Year: 2012

Version:

Please cite the original version:

Varis, T., & Tuovinen, T. (2012). Open benchmark database for multidisciplinary optimization problems. In M. Affenzeller, A. G. Bruzzone, F. De Felice, D. D. R. Vilas, C. Frydman, M. Massei, & Y. Merkuryev (Eds.), The 11th International Conference on Modeling and Applied Simulation (pp. 23-30). DIME Università di Genova. International Conference on Modeling and Applied Simulation.

All material supplied via JYX is protected by copyright and other intellectual property rights, and duplication or sale of all or part of any of the repository collections is not permitted, except that material may be duplicated by you for your research use or educational purposes in electronic or print form. You must obtain permission for any other use. Electronic or print copies may not be offered, whether for sale or otherwise to anyone who is not an authorised user.

OPEN BENCHMARK DATABASE FOR MULTIDISCIPLINARY OPTIMIZATION PROBLEMS

Tuomo Varis[(a)], Tero Tuovinen [(b)]

[(a)]Department of Mathematical Information Technology, University of Jyväskylä
[(b)] Department of Mathematical Information Technology, University of Jyväskylä

[(a)]tuomo.j.varis@jyu.fi, [(b)]tero.tuovinen@jyu.fi

ABSTRACT
Solving new increasingly complex problems requires development of new methods and tools but verification of their correctness and efficiency in absence of actual experimental data is difficult. In this paper we propose an open database of benchmark cases for multidisciplinary optimization validation that will serve as a reference point for discovery and validation of optimization methods and facilitate adoption of such methods in the industry. The paper describes the goals of the database, the process of acquiring content to the database, its initial content and technical implementation.

Keywords: multidisciplinary, optimization, benchmarking, validation

1. INTRODUCTION

It is well known, that the mathematical and numerical analysis and optimization is going forward to multidisciplinary and multi-scale (e.g. more complex) problems. The natural reason for this trend is the tremendous increase in computational power in late decades. We are now in a situation, where everyone has the possibility to buy practically speaking unlimited resources of computing time through the Internet at a very decent price. A complex model with numerically estimated results will give us some insight in many phenomena that have never been modeled before. And, at the same time, verification and validation of multidisciplinary optimization methods and tools becomes a more and more crucial step for the process. The benchmarks defined before will not be enough for this new generation of problems. The optimization will provide one abstract layer over the regular analysis and complicates the process by having certain implications on for example how meshing is handled.

In this paper, we present an open database for multidisciplinary optimization problems which we have developed in order to tackle this challenge. Previously, similar benchmark databases have been developed for example by Ingenet (INGENET, 2008) and Flownet (Marini et al., 2002) projects. In this article, we will introduce a guide for our open database. The scope of the system comes from complex multidisciplinary optimization problems. We have listed the defined benchmark cases. For developing similar benchmark databases, we will propose one technical solution that has been tested in use. The database and its content are open for everyone on the Internet at the database web site (Design Test Case Database, 2009). Submitting new content requires a free registration and validation from our team before being published.

The aim of this study is to create a database, where scientists can propose and publish definitions of multidisciplinary and multi-objective optimization benchmark cases in study along with example solutions. Later on, other scientists in the field have a way to reconstruct the same benchmark with their tools and compare the results in a decent manner. The best cases will be computed multiple times with different methods and the pool of results available will grow. The openness of the system will give everyone a possibility to contribute and get feedback from their simulations. As a result, the most efficient and reliable methods and tools for solving each type of problem can be found.

2. GOALS OF THE DATABASE

Goals of the database three-fold:

1. to serve as a reference point for discovery and validation of optimization methods for different types of problems
2. to give scientists working on the field an opportunity to compare and demonstrate their methods, tools and expertise, and
3. to promote usage of design optimization techniques to industry.

Design optimization is an effective tool for enhancing properties of existing products by improving their designs through advanced algorithms and computational simulations instead of time and money consuming experiments on physical prototypes. The types of optimization problems vary greatly depending on the application domain and correct methods need to be chosen for the optimization to be efficient and successful. One major goal of our database is to work as a reference point for scientists and engineers working with design optimization in their search for the method best suitable for their problem at hand. This is done by providing benchmark cases from various fields, from

electromagnetics to acoustics and aerodynamics. In order to be useful as a reference point, the benchmark cases are defined in a generic yet rigorous manner and the example solutions provided by contributors include detailed information on the methods used to reach the solution along with analysis on both the progression of the optimization and the optimized design. When working in optimization it is also important to have a reference for validation of the methods used. When no actual experimental data is available, applying new techniques to an existing well defined problem and comparing the results to examples in the database can be done to gain insight on the performance and reliability of the methods. Due to the multi-step nature of simulation-driven design optimization, where a mistake in any phase (importing and remodeling geometry, meshing and simulation) can have drastic effects and lead to either inferior or altogether incorrect results, it is necessary to build on a pool of existing experiments to be confident about the methods used.

The database also gives the scientists and engineers working on optimization a new forum for interacting with other experts on the field. While papers are the preferred method for publicizing research in the scientific community, the database gives everyone a lucrative opportunity to prove their algorithms and codes on a variety of problems and publish the results on-line. We have also organized Database Workshop events that revolve around the benchmark cases in the database. These events are an excellent opportunity for networking but also have a competitive nature by allowing the scientists themselves present their results and compare them with those of others. The database also gives the scientists and engineers working on optimization a new forum for interacting with other experts on the field. While papers are the preferred method for publicizing research in the scientific community, the database gives everyone a lucrative opportunity to prove their algorithms and codes on a variety of problems and publish the results on-line. We have also organized Database Workshop events that revolve around the benchmark cases in the database. These events are an excellent opportunity for networking but also have a competitive nature by allowing the scientists themselves present their results and compare them with those of others.

While optimization methods have proven to be useful in industrial application, the adoption of such techniques has not yet reached companies outside very engineering-heavy industries such as aerospace. One purpose of our database is to show that optimization has applications beyond the narrow scope sometimes perceived by the industry. Some of the benchmark cases already available on-line have been created by engineers from large companies and despite generality are directly applicable to problems often encountered in product design and manufacturing. One of our goals is to help company engineers to realize the benefits of optimization and simulation-based prototyping and encourage co-operation with academic experts. Increased collaboration would help to bridge the gap between the academic and industrial worlds.

3. THE PROCESS OF ACQUIRING DEFINITIONS OF THE BENCHMARK CASES

The first target for this study was to find the benchmark definitions from the industry. We noted that in industry, there are lots of open questions concerning multidisciplinary problems and optimization and the need for this kind of system is urgent. However, defining the benchmark cases was difficult, the line between confidential and public knowledge was thin and the expertise of the engineers was targeted in a very narrow scope on the field and thus were usually unable to describe the benchmark in general scientific context. As the result, we received benchmark test case definitions that were not easily reproduced and therefore, the potential contributors coming from different engineering fields or academia did not see the benefits for collaborating with the system. The feedback concerning the system was poor.

The second target was to define the cases on an academic basis. We did noticed, that the definitions of the problems and the generality was much easier to achieve and the benefits were not restricted to a single branch of the industry. Working in the scientific community was much more natural. As the result, we got some very well defined benchmark cases and several solutions for comparison purposes. The system showed its possibilities. Still, we were lacking the audience. The website of the system received relatively few hits and in seminars related to the benchmarks we had to challenge each scientist at a time to participate and contribute to our database. The amount of knowledge in the system increased slowly in time and but realizing the benefits of the system invited more scientists to participate and contribute. Scientists have to understand the value of the forum to justify the time spent in order to participate and convert their solvers and other tools to support the formats requested by the system.

Our third target will be the full openness of the system. The system is highly dependent on the quality and amount of computation results provided. The scientist that has done research on a problem and provided the related benchmark definition has to take the initiative to provide the first results on that case. The benefit for the scientist in this stage is the number of possible citations produced by the knowledge and comparison. When the first results are available along with a description of the methods required to compute the case it is much easier for other participants to follow up and either improve the existing solution or take their own approach to the problem. But when the benchmark case definition is clear and without ambiguity and all needed data is available, the system begins to live its own life.

4. THE DEFINITIONS OF THE BENCMARK CASES

In order for the stored computation results to fulfill their purpose as a reference for validation, it is critical to ensure all participants have solved the same problem. While the methods and tools used may vary, the system under optimization along with the modeled physical phenomena must be the same. Thus the definitions of the benchmark cases need to be rigorous, contain all relevant information required to re-compute the case and leave no ambiguity for the interpretation. Our database contains an on-line template based on the problem definitions by Désidéri et al.(1991) for the definitions. The published benchmark case definitions are generated directly from the information entered in the template. Each benchmark case description has the following structure:

- Introduction
  - The introduction describes the main difficulties and challenges of the benchmark case along with a short description of the application area. The introduction should justify the importance and usefulness of computing the benchmark.
- Objectives
  - This section describes the goal of the optimization in context with the application area.
- Requirements
  - Requirements of the benchmark list the types of tools required to successfully compute the case such as FEA software, meshers and optimizers.
- Computational domain
  - This section describes the computational domain of the benchmark case along with the geometry of the object(s) under optimization. Usage of illustrations along with parameters and measurements is recommended.
- Modelling: physical properties
  - Each benchmark case needs to provide a description of the exact physical conditions and properties for the simulations.
- Boundary and/or initial conditions for computations
  - This section defines the boundary conditions and the initial state of the system to be simulated.
- Material parameters
  - This describes whether the benchmark is dealing with solid and/or fluid materials.
- Optimization
  - The quantity to either minimize or maximize.
- Design parameters
  - This section describes the parameters of the geometry that can be altered in order to alter the properties of the object.
- Objective function definition
  - Objective function is the mathematical representation of the fitness of the object under optimization.
- Results
  - This section describes the format and content of the results, such as quantities and plots of interest, requested to be updated in the database after successful computation of the case.

After the submission of a new benchmark case on-line, the definition is evaluated for correctness and completeness by our team and improvements are requested if deemed necessary. When the definition is considered finished it is published on-line in the database. The creator of the benchmark case is named as the chairman of the case. The benchmark case chairmen have the opportunity to participate in database workshop events to present the benchmark case and chair the benchmark case session. It is also preferred that the chairmen solve the case themselves and store the initial example solution to the database.

So far the database contains 12 benchmark case definitions of which two have been received from the industry and rest from academic research units. The topics of the cases vary from academic type optimization problems to industrial level problems that represent situations encountered in actual product design.

5. AVAILABLE BENCHMARK CASES

This section summarizes briefly the benchmark cases provided by chairman contributors of the database. Complete and detailed descriptions are available on-line at the Design Test Case Database.

5.1. Academic Benchmark Cases

5.1.1. A Numerical Set-up For Benchmarking And Optimization Of Fluid-Structure Interaction

The main purpose of this benchmark is to describe specific configurations which shall help in future to test and to compare different numerical methods and code implementations for the fluid-structure interaction (FSI) problem which can be additionally coupled with an

additional optimization procedure. This FSI benchmark is based on an older successful 'flow around cylinder' benchmark for incompressible laminar fluid flow (Schäfer and Turek, 1996). Similar to this older configuration we consider the flow to be incompressible and in the laminar regime. The structure is allowed to be compressible, and the deformations of the structure should be significant. The overall setup of the interaction problem is such that the solid object with elastic part is submerged in a channel flow (Figure 1).

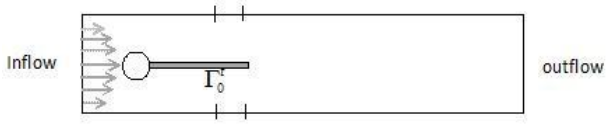

Figure 1: Illustration of the computational domain (Turek, 2009)

5.1.2. Inverse or Optimization Problems for Multiple (Ellipse) Ellipsoid Configurations

This academic test case was developed in order to study algorithmic convergence by splitting the inverse problem (recovery of target pressure on the surface) into smaller sub-problems. It also provides a way to study the behaviour of algorithms with meshes of different quality. Finally, it can be expanded into a simple test platform for multiphysics optimization (computational fluid dynamics, computational electromagnetism, and aeroacoustics), both in 2D and 3D (Leskinen, 2009). This benchmark has been successfully used by Leskinen and Hecht (2011), and Leskinen and Périaux (2011). This benchmark includes three different reconstruction problems where the goal is to recover the original positions of two ellipses or ellipsoids (Figure 2) under varying conditions.

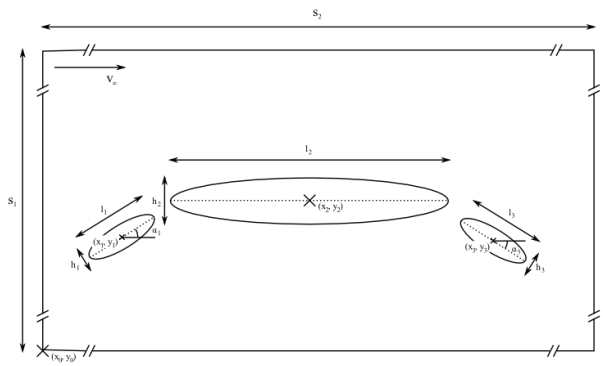

Figure 2: Illustration of the computational domain (Leskinen, 2009)

5.1.3. Optimization of Beam Profile in Fluid-Structure Interaction

The test case combines fluid-structure interaction with optimization in a simple but effective way. The cost function is well defined, has a definite global minimum and its evaluation requires the solution of a strongly coupled fluid-structure interaction problem. The individual problems are easily solved while the coupled problem sets requirements to the efficient coupling of the different sub-problems. The aim is to optimize the geometry of an elastic beam so that it bends as little as possible under the pressure and traction forces resulting from viscous incompressible flow. The profile of the beam has an effect both on the flow and the structural stiffness of the beam, respectively. (Råback, 2009b) (Figure 3)

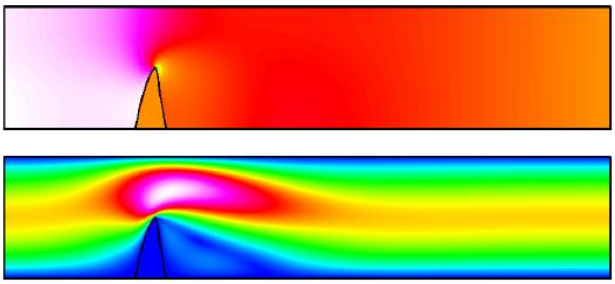

Figure 3: Pressure and velocity fields in an example solution (Råback, 2009a)

5.1.4. Shock Control Bump Optimization on a Transonic Laminar Flow Airfoil

Shock control bumps were found to be effective in reducing the wave drag and the total drag if installed on transonic airfoils or wings. However, their effectiveness relies on the position, height, and size of the bumps. This benchmark case looks into the optimal design parameters for a given laminar flow airfoil, i.e. RAE5243 airfoil (Figure 4), at the design Mach number and Reynolds number. It is divided into two cases: (1) fully turbulent flow; (2) fixed transition at 45%c. The optimization is constrained by a given lift condition. (Qin, 2009)

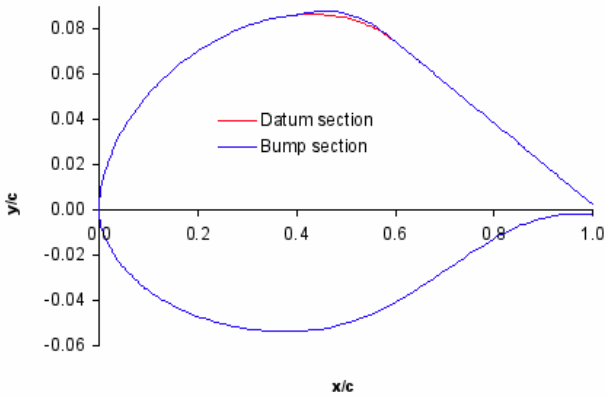

Figure 4: RAE5243 airfoil with a shock control bump (Qin, 2009)

5.1.5. 3D Shock Control Bump Optimisation

This test case extends the optimization of a shock control bump on a RAE5243. The computations are conducted under different flight conditions and in a three-dimensional domain (Figure 5).

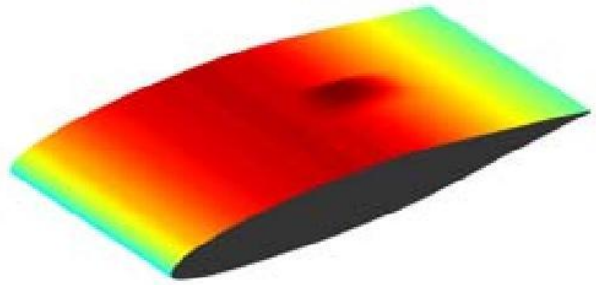

Figure 5: RAE5243 wing with 3D shock control bump (McIntosh & Qin, 2010)

5.1.6. Maximizing the Performance of SHM Systems by Robust Sensor Network Optimization

Recent advanced design tools and material offers complex structures with composite materials. However, the impact on structures causes delamination between composite layers or crack on fiber-reinforced area which the current visual inspection is impossible to check. In addition, current visual inspection will take high time cost on large structures in engineering. This is why Structural Health Monitoring (SHM) system is introduced as a promising technology to maintain healthy structure in increasing engineering applications.

The main goal of this test case is to maximize the Probability of Detection (POD) by selecting an optimal number of sensors and also their locations with efficient optimization methods like Evolutionary Algorithms which will be part of a SHM system to handle complex models. (Chang *et al.*, 2010)

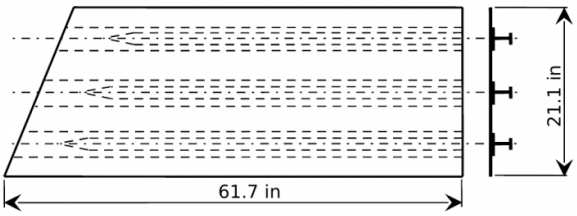

Figure 6: Test model used in the benchmark case (Chang *et al.*, 2010)

5.1.7. Reconstruction of BINACA0012 Geometry Using Discrete and Continuous Optimization

This benchmark case presents an inverse problem consisting of recovery of positions of two BINAC0012 airfoils (Figure 7) in either discrete or continuous search space.

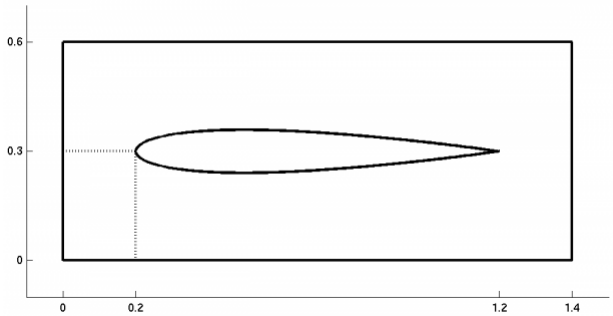

Figure 7: BINAC0012 airfoil in its bounding box (Leskinen and Wang, 2010)

5.2. Industrial Benchmark Cases

5.2.1. MDO of Mobile Phone: Antenna, SAR, HAC and Temperature

This benchmark case draws from common design challenges in mobile phone industry, especially in antenna design (Figure 8). The problem is divided in three different levels with increasing difficulty.

The first option is to optimize the antenna geometry according to the defined objective function. A reference model is provided along with the benchmark case definition that can be used as a reference. The second option is to combine antenna performance and temperature on keyboard and display area. The third, and most challenging, is to optimize the design according the all objectives given: antenna efficiency, temperature, specific absorption rate and hearing aid compatibility. (Jekkonen, 2009)

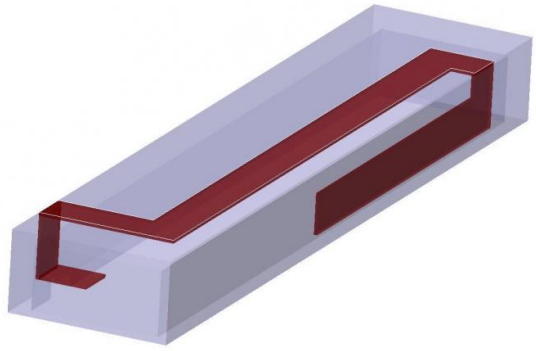

Figure 8: Example geometry for an antenna radiator

5.2.2. Optimization of a Generic Air Control Surface

This benchmark case involves the minimization of the mass of a generic air control surface by shape optimization of the internal spar structure of the air control surface. Figure 9 shows the structure under optimization.

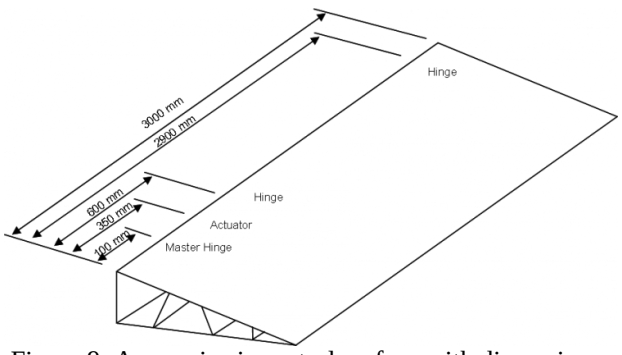

Figure 9: A generic air control surface with dimensions (Hepola, 2009)

5.2.3. Numerical Investigation of 3D Flow Over Horizontal Axis Wind Turbine NREL Phase VI

The goal in this benchmark case is to maximize the generated power of a horizontal axis wind turbine with constant or slight increase of thrust. The wind turbine under examination is a NREL Phase VI, a two-bladed 10.1-meter diameter upwind wind turbine. It is a stall regulated wind turbine, with twisted and tapered blades whose sectional geometry is the S809 airfoil. (Hirsch, 2010) Figure 10 shows the airfoil along with its loading components.

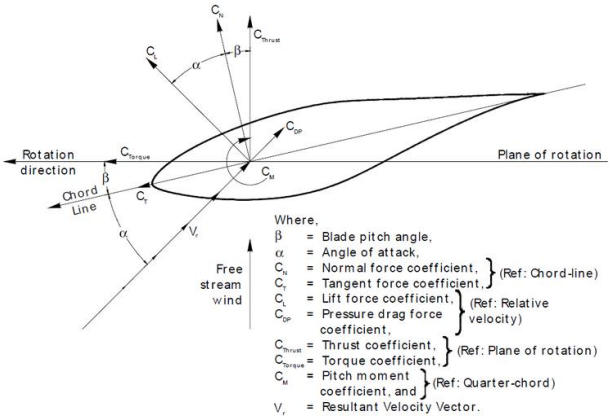

Figure 10: S809 airfoil with the definition of loading components (Hirsch, 2010)

5.2.4. Optimal Flow Divider

The first component in the headbox of a paper machine is a flow divider (Figure 11), which is to be designed to give an equal flow rate over the width of a paper machine. In this benchmark case the goal is to optimize the piece-wise linear back-wall of the flow divider in such a way that the outflow is as even as possible. The back wall is parameterized by equally distributed 5 design variables with one meter spacing. (Hämäläinen, 2010)

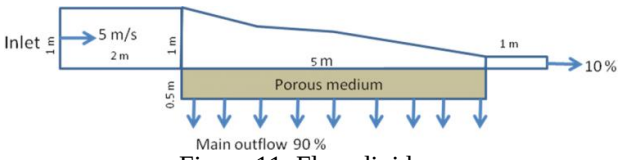

Figure 11: Flow divider

6. TECHNICAL IMPLEMENTATION OF THE DATABASE

In contrast to for example Ingenet database where the content was distributed as a static collection of HTML documents and also on a physical CD medium we want to provide the scientific community with a system that grows in time. We need to be able to add new benchmark case descriptions on the fly and also provide the contributors with a simple method of delivering their results in a uniform manner. We expect the amount of benchmark cases and contributed results to grow significantly as the database gains publicity. To prepare for growth a scalable software tool for efficient publishing and management of the benchmark case descriptions and computation results is needed. We also want to keep the presentation level and the user interface (i.e. the pages the users sees when browsing to the database web site) separate from the actual data. A Web Content Management System (CMS) called Drupal (Drupal.org, 2011) was chosen for this task.

Drupal is a popular open source CMS / web application framework written in PHP. Because it runs on a typical LAMP software stack (Linux, Apache, MySQL, PHP, see Figure 12) our entire database is based completely on open source technologies. HTTP services are provided by the Apache web server running on Linux operating system. Apache uses a PHP interpreter to run Drupal that uses the MySQL database for storing most of the content. Large data files are stored directly on the server file system. Drupal is highly extensible and besides managing, creating and publishing provides all the functionality required by our system: user management, role based and granular access management and dynamic user interfaces. Due to its extensibility and large amount of plug-ins available, many features such as TeX formatted mathematic formulas, file uploads could be implemented without writing custom code.

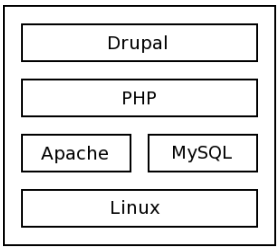

Figure 12: Software stack of the Design Test Case Database

In order to make the database as useful as possible we want to give users the opportunity of examining the actual post-processing data of the example solutions instead of static plots. For this reason we request all example solutions to use a common format for storing meshes and post-processing data. The VTK file format, supported by the Visualization Toolkit libraries and for example ParaView visualization software was chosen as the common format. The reason for this was the fact that it is well documented (Kitware, 2010), supports a

wide array of different types of data, is based on XML and thus human readable and relatively easy to convert to from other formats. By using the open source visualization tool ParaView, all users of our database are able to examine and compare the contributed data in high detail instead of resorting to static low resolution pre-prepared plots (Figure 13). ParaView was also successfully used in our Database Workshop events during presentation of the results.

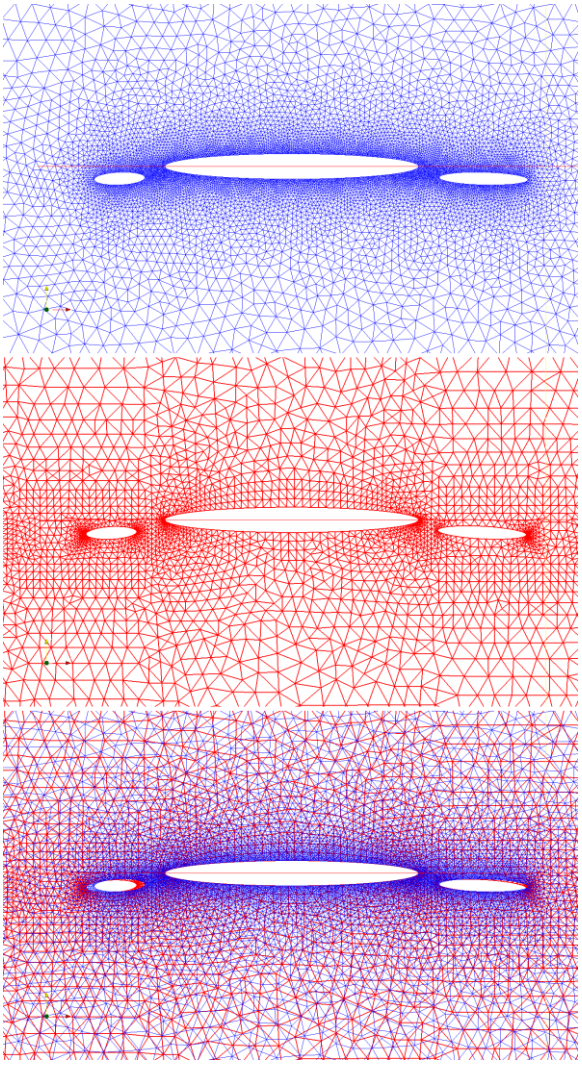

Figure 13: Example of a comparison of two contributed solutions using ParaView

7. CONCLUSIONS

Solving new increasingly complex problems requires development of new methods and tools but verification of their correctness and efficiency in absence of actual experimental data is difficult. In this paper we presented an open database of benchmark cases for multidisciplinary optimization validation that can serve as a reference point for discovery and validation of optimization methods and facilitate adoption of such methods in the industry.

By making this type of benchmark cases available to all interested parties, the long term goal is to improve the quality of future multidisciplinary optimization studies. One goal of this paper was to share the experiences obtained during the process of building the database and to make the environment better known. We have shown how to contribute to the system and described several benchmark cases, defined by chairmen, found in the database. Also we have introduced one way to implement a scalable on-line database for this kind of purpose. The definition and prescribed format for solution comparison have been noted.

ACKNOWLEDGMENTS

We would like to acknowledge professors Jacques Periaux and Pekka Neittaanmäki for discussions and ideas concerning the development of the Design Test Case Database and organizing the Database Workshop events.

This work has been made possible by MASI and DTP programs funded by the Technology Development center of Finland (TEKES) and FiDiPro program funded by the Academy of Finland and TEKES.

Special thanks to all the people who have contributed to the database, chairmen for creating the benchmark case definitions and workshop participants for example solutions.

REFERENCES

Chang, F.K., C. Lee, & J. Periaux, 2010. TA7: Maximizing the Performance of SHM Systems by Robust Sensor Network Optimization. Available from Design Test Case Database: http://jucri.jyu.fi/?q=testcase/35

Désidéri, J.A., R. Glowinski and J. Périaux, editors, 1991. Hypersonic flows for reentry problems, vol. I: Survey lectures and test cases for analysis. Springer: Berlin.

Design Test Case Database, 2009. Design Test Case Database. Available from http://jucri.jyu.fi/

Drupal.org, 2011. Drupal.org - Open Source CMS. Available from http://drupal.org/

Hepola, P., 2009. TI2: Patria AST Test Case. Available from Design Test Case Database: http://jucri.jyu.fi/?q=testcase/6

Hirsch, C., 2010. TI4: Numerical investigation of 3D flow over Horizontal Axis Wind Turbine NREL Phase VI. Available from Design Test Case Database: http://jucri.jyu.fi/?q=testcase/48

Hämäläinen, J., 2010. TI5: Optimal flow divider. Available from Design Test Case Database: http://jucri.jyu.fi/?q=testcase/50

INGENET, 2008. Evolutionary Computing for Industrial Design: The Ingenet Experience. Available from European INGEnet Network Project: http://ceani.ulpgc.es/ingenetcd/database/database.htm

Jekkonen, J., 2009. TI1: MDO of Mobile Phone: Antenna, SAR, HAC and Temperature. Available from Design Test Case Database: http://jucri.jyu.fi/?q=testcase/6

Kitware, 2010. VTK User's Guide Version 11. Kitware Inc.

Leskinen, J., 2009. TA2: Inverse or optimization problems for multiple (ellipse) ellipsoid configurations. Available from Design Test Case Database: http://jucri.jyu.fi/?q=testcase/5

Leskinen, J. and F. Hecht, 2011. Nash Games and Adaptive Meshing in a Steady-State Navier-Stokes Shape Reconstruction Problem. Evolutionary Methods for Design, Optimization and Control, Proceedings of the EUROGEN09 conference, June 15-17. Cracow, Poland.

Leskinen, J. and J. Périaux, 2011. Increasing Paralellism of Evolutionary Algorithms by Nash Games in Design Inverse Flow Problems. Evolutionary Methods for Design, Optimization and Control, CIRA. Proceedings of the EUROGEN11 conference, September 14-16, 2011. Capua, Italy.

Leskinen, J. and H. Wang, 2010. Reconstruction of BINACA0012 geometry using discrete and continuous optimization. Available from Design Test Case Database: http://jucri.jyu.fi/?q=testcase/49

Marini, M., R. Paoli, F. Grasso, J. Periaux, and J.A. Desideri, 2002. Verification and Validation in Computational Fluid Dynamics: the FLOWNET Database Experience. JSME International Journal, Series B , 45 (1).

McIntosh S., and N. Qin, 2010. TA6: 3D Shock Control Bump Optimisation. Available from Design Test Case Database: http://jucri.jyu.fi/?q=testcase/34

Qin, N., 2009. TA5: Shock control bump optimization on a transonic laminar flow airfoil. Available from Design Test Case Database: http://jucri.jyu.fi/?q=testcase/4

Råback, P., 2009a. Optimization of beam profile with Elmer . Available from Design Test Case Database: http://jucri.jyu.fi/?q=node/27

Råback, P., 2009b. TA4: Optimization of beam profile in fluid-structure interaction. Available from Design Test Case Database: http://jucri.jyu.fi/?q=testcase/8

Schäfer, M. and S. Turek, 1996. Benchmark computations of laminar flow around cylinder. Flow Simulation with High-Performance Computers II, volume 52 of Notes on Numerical Fluid Mechanics .

Turek, S., 2009. TA1: A numerical set-up for benchmarking and optimization of fluid-structure interaction . Available from Design Test Case Database: http://jucri.jyu.fi/?q=testcase/14

Turek, S. and J. Hron, 2006. Proposal for numerical benchmarking of fluid-structure interaction between an elastic object and laminar incompressible flow. Lecture Notes in Computational Science and Engineering , Volume 53, 371-385.